● EXPLANATIONS OF ORDERING CODE

DESCRIPTION : CNTC 0603 1% 10K 3435±1%

SYNTON CODE : CNTC 0603 F 1002 - 3 435

POWER
- 0201
- 0402
- 0603
- 0805
- 1206

TOLERANCE OF RESISTANCE
- F : ±1%
- G : ±2%
- H : ±3%
- J : ±5%
- K : ±10%

RESISTANCE VALUE

3 Digits :
- 101 : 100Ω
- 103 : 10K
- 333 : 33K
- 104 : 100K
- 334 : 330K

4 Digits :
- 1000 : 100Ω
- 1002 : 10K
- 3302 : 33K
- 1003 : 100K
- 3303 : 330K

B VALUE
- 1 : 1000
- 2 : 2000
- 3 : 3000
- 4 : 4000

B VALUE
- 0~50
- 51~100
- 101~150
- 151~200
- 201~250
- 251~300
- 301~350
- 351~400
- 401~450
- 451~500
- 501~550
- 551~600
- 601~650
- 651~700
- 701~750
- 751~800
- 801~850
- 851~900
- 901~950
- 951~1000

Confidential, Do Not Disseminate.

DESCRIPTION

A thermistor is a thermally sensitive resistor whose primary function is to exhibit a change in electrical resistance with a change in body temperature.
NTC thermistor is one in which the zero-power resistance decreases with an increase in temperature.

FEATURES

- Multilayer structure allows diverse resistance value in the same B constant.
- Ultra small size, low capacitor, high B value.
- Glass coated perform for long term reliability.
- Non-polarized for mounting.
- Possibility for Flow/Reflow soldering.

APPLICATIONS

- Temperature compensation for crystal oscillator (TCXO).
- Temperature compensation for Personal computer.
- Temperature detection for CPU and memory device.
- Temperature detection for battery pack.
- Temperature compensation for contrast of LCD.
- Temperature compensation and sensing of car audio equipment. (CD, MD, Tuner).

Confidential, Do Not Disseminate.

An example

■ **Temperature compensated crystal oscillator(TCXO)**
Chip thermistor is used for temperature compensation of TCXO, which is a key device for mobile phones.

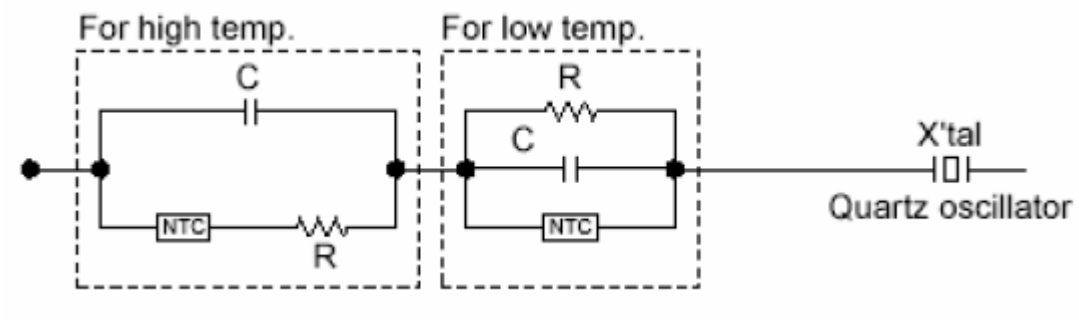

■ **Battery pack**
Chip thermistor with high precision is used for the protection circuit inside the battery pack for mobile electronic devices.

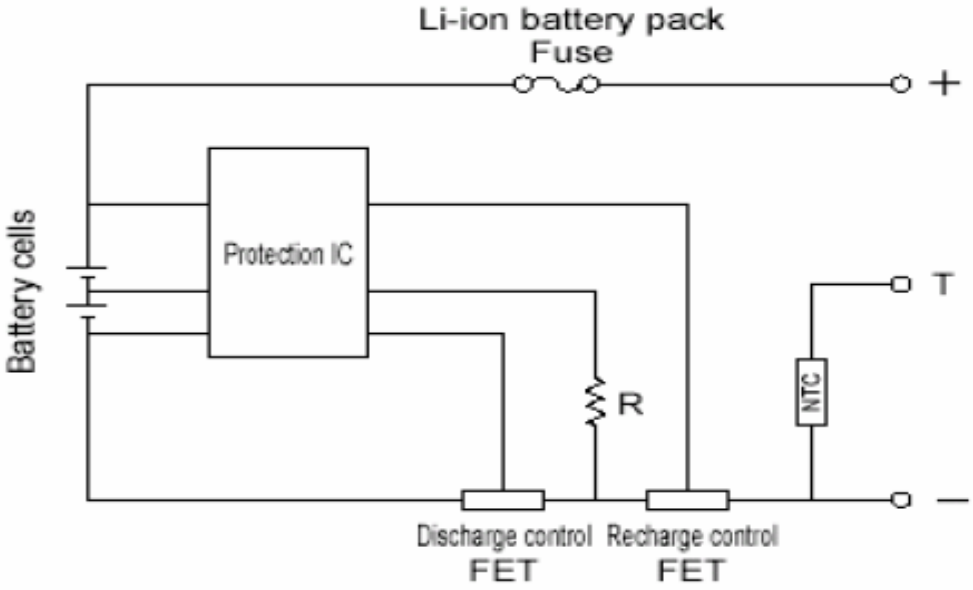

● RELIABILITY TEST

Test Item		Standard	Test Method	$\triangle R_{25}/R_{25}$
Environmental test	Life	MIL-STD-202F Method 108A	Test temperature:70℃ Test duration:1000 hrs Load power:1206-6.5mW, 0805-5.0mW, 0603-4.5mW, 0402-3.5mW,	MAX.± 3%
	Humidity	MIL-STD-202F Method 103B	Test temperature:40℃ Test humidity:90% Test duration:1000 hrs Load power:1206-6.5mW, 0805-5.0mW, 0603-4.5mW, 0402-3.5mW,	MAX.± 3%
	Thermal shock	MIL-STD-202F Method 107G	Test cycle:10 times Test temperature:-40℃ & 125℃ 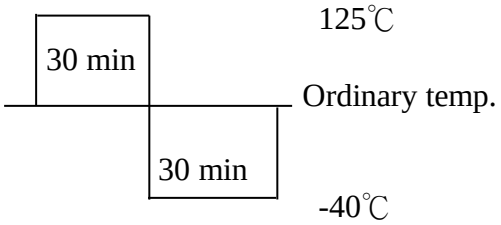	MAX.± 3%
	Storage in dry heat	IEC 68-2-2	Test temperature:125℃ Test duration:1000 hrs	MAX.± 3%
Mechanical Performance test	Solderability	MIL-STD-202F Method 208H	Soldering temperature”235℃ Duration of immersion: 2 seconds	95% min. coverage
	Resistance to soldering heat	MIL-R-55342D PARA 4.7.7	Soldering temperature: 260℃ Duration of immersion: 10 seconds	MAX.± 3%

Confidential, Do Not Disseminate.

Mechanical Performance test	Bending strength	JIS C 5201 4.33	Pressurizing rod at a rate of 1mm/sec Maintenance time:5 sec Bending distance:1 mm(min.) 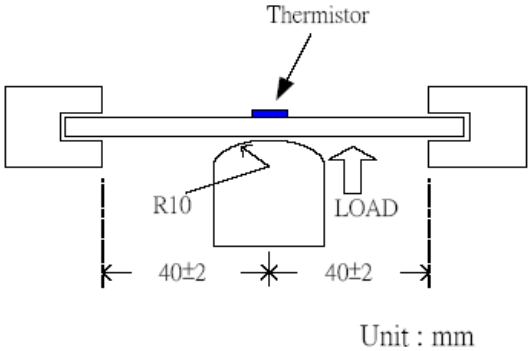 	Visual: No mechanical damage
	Resistance to flexure of substrate	JIS C 5201 4.4	Pressurizing force shall be 3kg 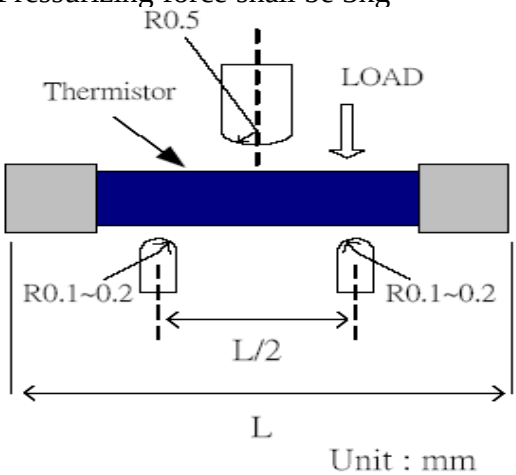 	MIN. 3Kg
Electrical Performance test	Insulation Resistance	MIL-STD-202F Method 302	DC 250V for 10 seconds 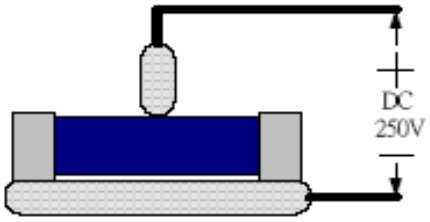 	Over 1000MΩ
	Dielectric withstand voltage	MIL-STD-202F Method 301	DC 250V for 10 seconds 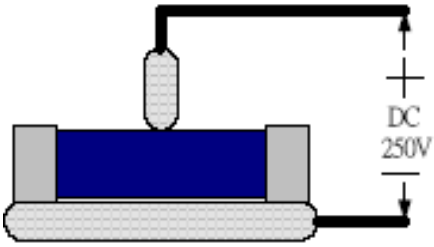 	NOT Short

● CHIP DIMENSION

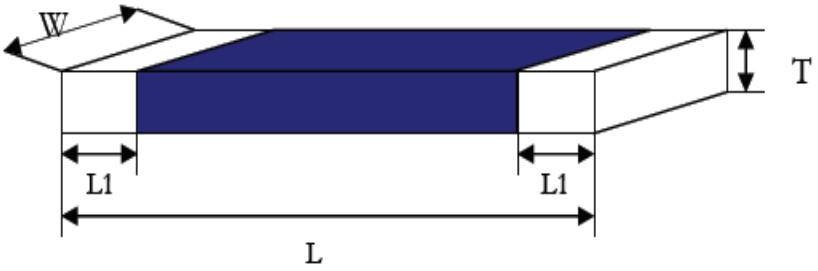

Unit: mm

ITEM	L	W	T	L1
CNTC0201	0.60±0.03	0.30±0.03	0.40 max	0.10 ~ 0.20
CNTC0402	1.00±0.10	0.50±0.10	0.60 max	0.15 ~ 0.30
CNTC0603	1.60±0.15	0.80±0.15	0.95 max	0.20 ~ 0.50
CNTC0805	2.00±0.20	1.25±0.20	1.20 max	0.20 ~ 0.60
CNTC1206	3.20±0.20	1.60±0.20	1.40 max	0.25 ~ 0.60

● CHIP STRUCTURE

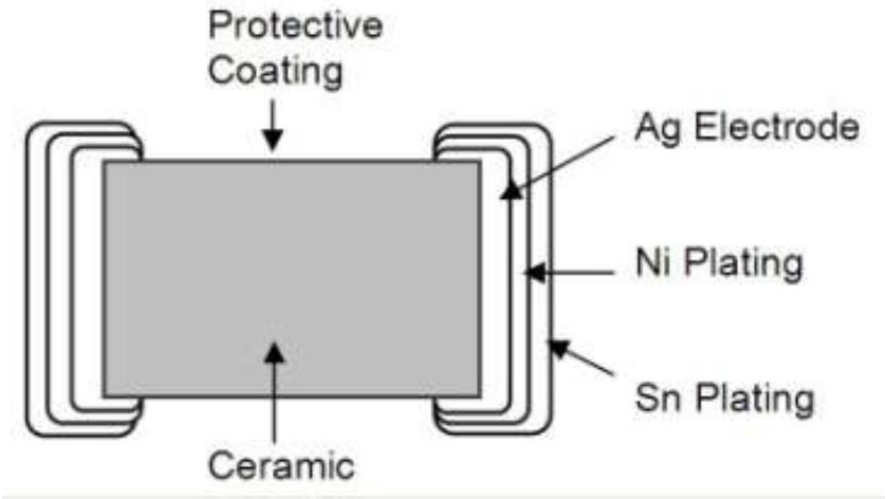

● SPECIFICATION

*** 1.0 Maximum Power Rating = Thermal Dissipation Constant x (125℃-25℃)**

■ 0201 SIZE

Resistance(25℃) (KΩ)	B-constant (25-85℃) (K)	B-constant (25-50℃) (K)	Maximum Power Rating (25℃) (mW)	Thermal Dissipation Constant (mW/℃)	Operating Temp. Range (℃)
10	3435	-	100	1	-40 ~ 125
47	4100	-			
68	-	4250			
100	-	4250			

■ 0402 SIZE

Resistance(25℃) (KΩ)	B-constant (25-85℃) (K)	Maximum Power Rating (25℃) (mW)	Thermal Dissipation Constant (mW/℃)	Operating Temp. Range (℃)
1	4100	250	2.5	-40 ~ 125
2	4520			
10	3435			
10	3900			
10	3970			
10	4100			
33	3950			
47	4050			
47	4100			
68	3970			
68	4150			
100	3950			
100	4000			
100	4050			
100	4300			
470	4050			

Confidential, Do Not Disseminate.

■ 0603 SIZE

Resistance(25℃) (KΩ)	B-constant (25-85℃) (K)	Maximum Power Rating (25℃) (mW)	Thermal Dissipation Constant (mW/℃)	Operating Temp. Range (℃)
1.00	2950	350	3.5	-40 ~ +125
2.00	3100			
2.00	3150			
2.00	4150			
2.20	3150			
3.00	3150			
3.00	3200			
3.30	3150			
4.70	3340			
5.00	3340			
6.80	3435			
10.0	3435			
10.0	3550			
10.0	3610			
10.0	3700			
10.0	3970			
10.0	4050			
12.0	3550			
22.0	3900			
30.0	3900			
33.0	3900			
33.0	3950			
40.0	3950			
47.0	3950			
47.0	4050			
49.0	3950			
50.0	3950			
51.0	3950			
68.0	3950			
100.0	3950			
100.0	4050			
100.0	4400			
150.0	4000			
150.0	4600			
200.0	4055			
220.0	3950			
300.0	4055			

Confidential, Do Not Disseminate.

330.0	**4050**			
330.0	**4100**			
370.0	**4000**			
400.0	**4100**			
470.0	**4055**			
500.0	**4100**			
560.0	**4100**			

Confidential, Do Not Disseminate.

■ 0805 SIZE

Resistance(25℃) (KΩ)	B-constant (25-85℃) (K)	Maximum Power Rating (25℃) (mW)	Thermal Dissipation Constant (mW/℃)	Operating Temp. Range (℃)
2.00	3200	400	4	-40 ~ 125
2.20	3200			
4.70	3435			
4.70	3660			
5.00	3435			
10.0	3435			
10.0	3550			
10.0	3970			
12.0	3500			
12.0	3970			
15.0	3630			
22.0	3900			
22.0	4055			
23.0	3900			
30.0	3900			
30.0	3950			
33.0	3900			
33.0	4055			
47.0	4000			
50.0	4000			
56.0	4000			
68.0	3950			
68.0	4000			
100.0	4000			
100.0	4050			
150.0	4055			
200.0	3950			
220.0	4055			
330.0	4100			
560.0	4100			

■ 1206 SIZE

Resistance(25℃) (KΩ)	B-constant (25-85℃) (K)	Maximum Power Rating (25℃) (mW)	Thermal Dissipation Constant (mW/℃)	Operating Temp. Range (℃)
10.0	3435	450	4.5	-40 ~ 125

Confidential, Do Not Disseminate.

● REFLOW SOLDERING PROFILE

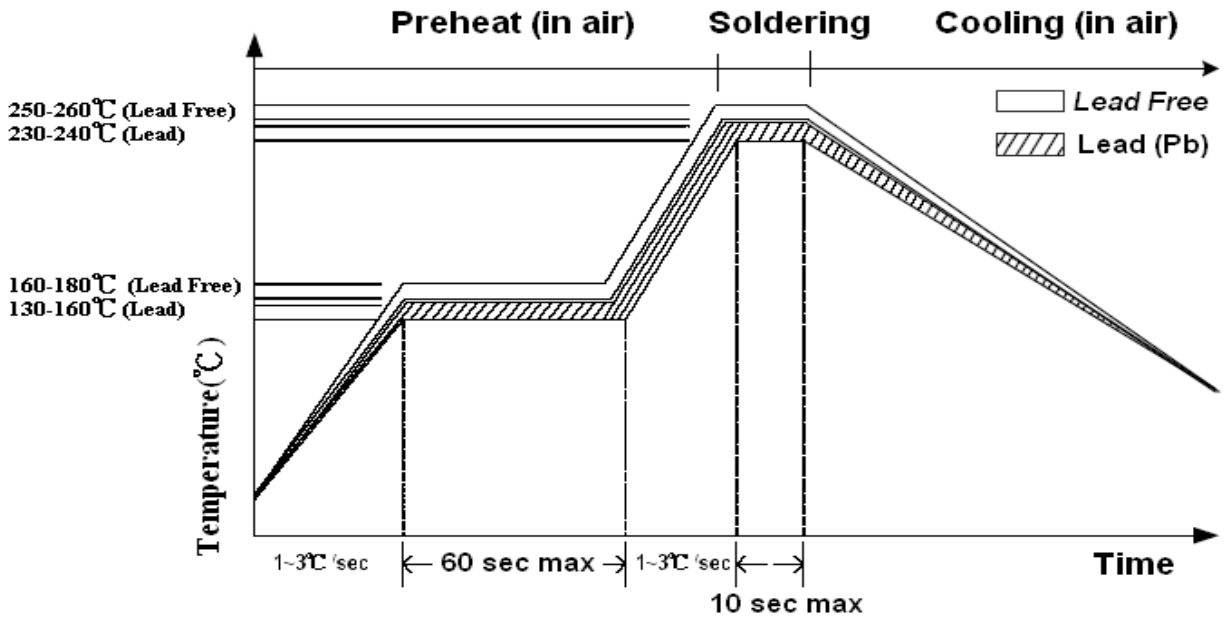

● MOUNTING POSITION

Choose a mounting position that minimize the stress imposed on the chip during flexing or bending of the board.

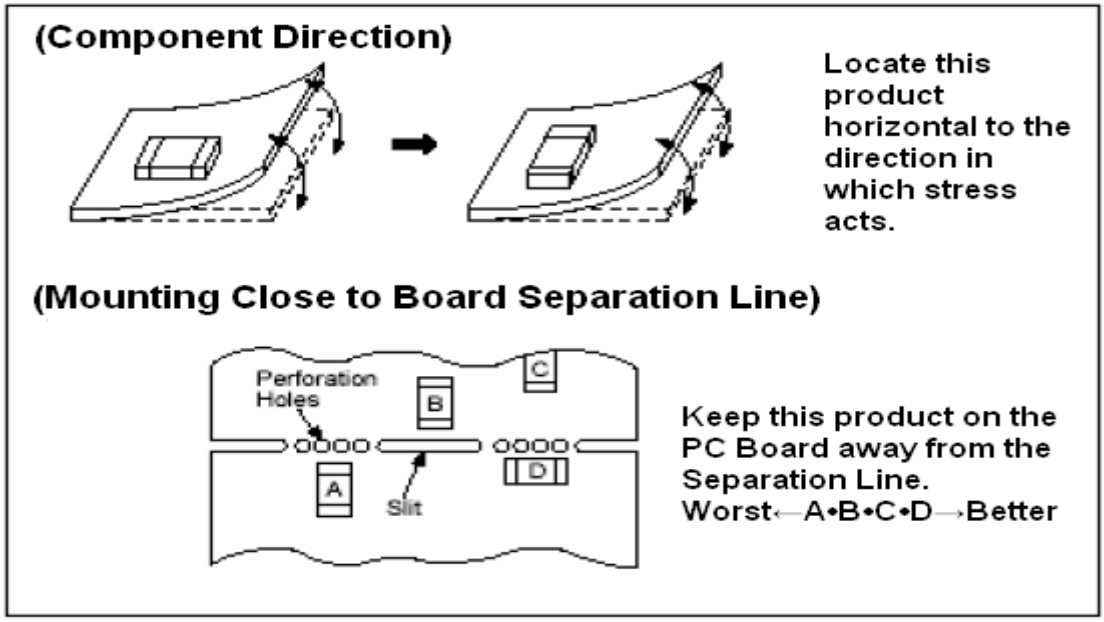

● REEL DIMENSIONS

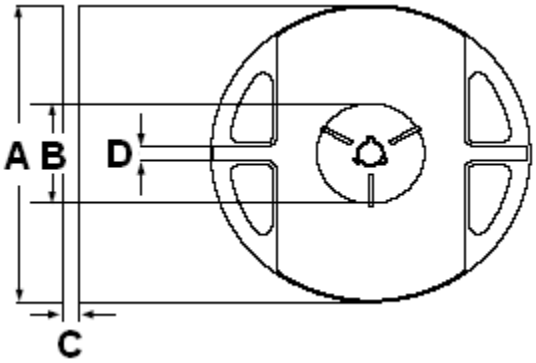

Unit: mm

ITEM	A	B	C	D
Dimension	**178.0**±1.0	**60.0**±1.0	**9.0**±0.1	**13.0**±0.1

● RESISTANCE-TEMPERATURE TABL

TEMP. (℃)	0402-J-103-3435			0402-J-103-3900			0402-J-333-3950			0402-J-473-4100		
	Resistance(Ω)			Resistance(Ω)			Resistance(Ω)			Resistance(Ω)		
	Min.	Center	Max.	Min.	Center	Max.	Min.	Center	Max.	Min.	Center	Max.
-40	214196	248277	287060	326573	383504	449233	1127690	1326137	1555607	1840181	2173134	2559915
-35	158674	182221	208740	232292	269928	312877	798632	929204	1078420	1286255	1502252	1750134
-30	119003	135452	153791	167561	192752	221176	573675	660673	158962	912410	1054371	1215373
-25	90291	101898	114710	122469	139522	158552	417614	476246	541751	656241	750654	856504
-20	69258	77523	86557	90627	102289	115164	307845	347769	391890	478179	541645	612002
-15	53673	59606	66029	67851	75900	84691	229625	257064	287062	352730	395804	443028
-10	42000	46290	50891	51361	56961	63014	173198	192211	212777	263218	292700	324670
-5	33168	36290	39606	39284	43208	47404	132019	145286	159487	198578	218903	240706
0	26420	28704	31108	30343	33109	36035	101635	110948	120811	151365	165463	180422
5	21218	22897	24646	23656	25614	27664	78984	85551	92433	116509	126334	136644
10	17173	18410	19688	18606	19996	21437	61930	66576	71392	90513	97382	104510
15	14001	14916	15850	14756	15745	16759	48969	52263	55638	70935	75746	80680
20	11495	12171	12856	11795	12500	13213	39033	41367	43730	56057	59424	62836
25	9500	10000	10500	9500	10000	10500	31350	33000	34650	44650	47000	49350
30	7811	8269	8733	7607	8059	8517	25032	26523	28032	35348	37462	39604
35	6464	6881	7306	6135	6541	6956	20133	21468	22834	28197	30081	32011
40	5381	5759	6148	4982	5344	5718	16307	17495	18723	22655	24324	26049
45	4506	4847	5201	4073	4394	4729	13295	14349	15447	18328	19800	21336
50	3793	4101	4423	3350	3635	3934	10908	11841	12821	14926	16221	17584
55	3210	3488	3780	2772	3024	3292	9004	9829	10702	12231	13369	14577
60	2731	2981	3246	2307	2530	2769	7475	8204	8982	10083	11083	12153
65	2334	2559	2799	1930	2128	2341	6240	6885	7577	8359	9239	10187
70	2004	2207	2425	1623	1799	1989	5237	5807	6424	6969	7743	8582
75	1728	1912	2109	1372	1528	1697	4417	4923	5472	5840	6522	7266
80	1497	1662	1842	1165	1304	1455	3743	4192	4683	4918	5521	6181
85	1301	1451	1615	994	1118	1253	3187	3586	4025	4162	4695	5282
90	1136	1272	1421	852	962	1084	2726	3081	3473	3538	4010	4533
95	995	1118	1254	733	831	941	2341	2658	3010	3021	3440	3907
100	875	987	1111	633	721	820	2019	2302	2618	2591	2963	3380
105	772	874	987	549	628	717	1748	2001	2286	2231	2562	2936
110	683	776	880	478	549	629	1519	1746	2002	1928	2224	2559
115	606	692	787	418	482	554	1325	1529	1760	1673	1938	2239
120	540	618	705	366	424	489	1159	1343	1553	1457	1694	1965
125	482	554	634	322	374	434	1018	1184	1374	1273	1486	1731

Confidential, Do Not Disseminate.

TEMP. (℃)	0402-J-683-3970			0402-J-104-3950			0402-J-104-4000			0402-J-474-4050		
	Resistance(Ω)			Resistance(Ω)			Resistance(Ω)			Resistance(Ω)		
	Min.	Center	Max.	Min.	Center	Max.	Min.	Center	Max.	Min.	Center	Max.
-40	2366263	2784231	3267838	3417243	4018597	4713961	3575785	4210942	4946521	12994319	15181202	17691787
-35	1672866	1947357	2261221	2420096	2815768	3267940	2521340	2937286	3413296	9558119	11061140	12768511
-30	1199645	1382201	1588555	1738409	2002039	2299884	1803566	2079442	2391523	7095310	8135734	9305399
-25	871895	994709	1131986	1265498	1443169	1641671	1307664	1492768	1699813	5313593	6038508	6845165
-20	641727	725212	817510	932863	1053847	1187545	960232	1085736	1224574	4013014	4521071	5080716
-15	477961	535242	597889	695832	778981	869885	713594	799488	893482	3055445	3413370	3803691
-10	359996	299620	442498	524843	582457	644779	536322	595595	659764	2344573	2597860	2871313
-5	274026	301632	331189	400057	440260	483293	407404	448599	492723	1812636	1992536	2184815
0	210681	230028	250523	307986	336206	366094	312606	341406	371928	1411540	1539677	1675247
5	163518	177139	191416	239345	259246	280099	242161	262391	283600	1106870	1198304	1294048
10	128053	137676	147651	187665	201746	216341	189289	203546	218329	873800	939089	1006733
15	101135	107944	114923	148392	158371	168600	149232	159296	169613	694282	740869	788606
20	80520	85338	90217	118281	125353	132516	118610	125712	132907	555099	588262	621848
25	64600	68000	71400	95000	100000	105000	95000	100000	105000	446500	470000	493500
30	51522	54592	57701	75854	80371	84945	75638	80149	84717	356540	377773	399270
35	41394	44141	46953	61011	65055	69195	60670	64702	68831	286412	305411	324856
40	33491	35934	38460	49414	53015	56735	49007	52591	56295	231411	248298	265752
45	27277	29443	31701	40288	43481	46811	39853	43025	46334	188019	202964	218549
50	22358	24273	26287	33056	35882	38852	32617	35419	38366	153593	166781	180649
55	18437	20130	21922	27285	29784	32431	26858	19331	31952	126130	137748	150060
60	15292	16787	18382	22653	24862	27218	22245	24427	26757	104105	114331	125248
65	12754	14075	15494	18910	20864	22961	18528	20454	22524	86349	95349	105024
70	10694	11862	13125	15869	17598	19467	15514	17216	19056	71964	79888	88463
75	9012	10046	11171	13385	14917	16583	13057	14562	16200	60254	67235	74838
80	7631	8548	9552	11344	12703	14190	11043	12376	13835	50677	56834	63580
85	6492	7307	8203	9658	10867	12196	9383	10566	11868	42807	48245	54238
90	5548	6273	7074	8260	9336	10525	8008	9060	10223	36314	41124	46454
95	4761	5407	6125	7094	8054	9120	6865	7801	8842	30932	35193	39941
100	4103	4680	5324	6118	6975	7933	5909	6744	7678	26454	30235	34470
105	3549	4066	4645	5296	6064	6926	5106	5853	6692	22712	26074	29859
110	3082	3545	4067	4603	5291	6068	4430	5098	5853	19573	22568	25956
115	2686	3102	3573	4014	4633	5335	3857	4457	5137	16930	19603	22641
120	2349	2724	3150	3513	4071	4705	3370	3909	4524	14696	17087	19817
125	2062	2399	2785	3085	3588	4163	2954	3440	3997	12802	14944	17401

Confidential, Do Not Disseminate.

TEMP. (℃)	0402-H-4703-4050			0402-J-103-3970			0402-G-1002-3950			-----		
	Resistance(Ω)			Resistance(Ω)			Resistance(Ω)			Resistance(Ω)		
	Min.	Min.	Min.	Min.	Center	Max.	Min.	Center	Max.	Min.	Center	Max.
-40	14222823	15181202	16189576	285767	334202	389869	294147	310643	327932	—	—	—
-35	10395721	11061140	11758560	209536	242710	280433	215012	226352	238195	—	—	—
-30	7669826	8135734	8622177	154935	177797	203522	158715	166574	174753	—	—	—
-25	5709697	6038508	6380507	115531	131380	149030	118273	123761	129452	—	—	—
-20	4287278	4521071	4763323	86872	97923	110103	88944	92804	96793	—	—	—
-15	3245968	3413370	3586175	65866	13612	82063	67480	70212	73026	—	—	—
-10	2477207	2597860	2721937	50350	55805	61697	51631	53577	55574	—	—	—
-5	1905043	1992536	2082171	38797	42655	46780	39829	41222	42646	—	—	—
0	1475870	1539677	1604797	30131	32869	35767	30968	31969	32990	—	—	—
5	1151527	1198304	1245859	23578	25527	27568	24260	24983	25717	—	—	—
10	904633	939089	973980	18588	19977	21416	19145	19668	20198	—	—	—
15	715380	740869	766576	14760	15750	16764	15213	15593	15976	—	—	—
20	569335	588262	607271	11802	12507	13221	12170	12446	12723	—	—	—
25	455900	470000	484100	9500	10000	10500	9800	10000	10200	—	—	—
30	365640	377773	389957	7597	8049	8507	7906	8085	8264	—	—	—
35	294974	305411	315932	6116	6521	6935	6418	6576	6736	—	—	—
40	239317	248298	257384	4954	5315	5688	5240	5380	5522	—	—	—
45	195229	202964	210816	4038	4358	4691	4302	4426	4551	—	—	—
50	160110	166781	173573	3311	3594	3891	3551	3660	3771	—	—	—
55	131986	137748	143632	2730	2980	3245	2947	3043	3141	—	—	—
60	109344	114331	119437	2262	2483	2718	2457	2542	2629	—	—	—
65	91025	95349	99789	1885	2080	2289	2059	2134	2211	—	—	—
70	76130	79888	83756	1578	1750	1936	1733	1799	1867	—	—	—
75	63962	67235	70612	1328	1480	1646	1465	1523	1583	—	—	—
80	53977	56834	59789	1121	1256	1403	1244	1296	1349	—	—	—
85	45744	48245	50837	951	1071	1203	1060	1106	1153	—	—	—
90	38930	41124	43402	810	916	1033	907	948	990	—	—	—
95	33264	35193	37201	693	787	892	780	816	853	—	—	—
100	28534	30235	32008	594	678	772	672	704	737	—	—	—
105	24571	26074	27644	512	587	671	581	610	640	—	—	—
110	21236	22568	23962	442	509	584	504	530	557	—	—	—
115	18420	19603	20843	383	443	511	439	462	486	—	—	—
120	16034	17087	18193	333	386	447	383	404	426	—	—	—
125	14004	14944	15932	290	338	393	336	355	374	—	—	—

Confidential, Do Not Disseminate.

TEMP. (℃)	0603-J-102-2950			0603-J-202-3100			0603-J-202-3150			0603-J-222-3150		
	Resistance(Ω)			Resistance(Ω)			Resistance(Ω)			Resistance(Ω)		
	Min.	Center	Max.	Min.	Center	Max.	Min.	Center	Max.	Min.	Center	Max.
-40	13796	15775	17993	31614	36301	41580	33081	38039	43631	36389	41843	47994
-35	10662	12095	13686	24115	27459	31189	25124	28644	32577	27636	31509	35834
-30	8328	9375	10528	18600	21011	23674	19297	21823	24617	21227	24005	27079
-25	6570	7342	8184	14498	16251	18170	14981	16809	18814	16479	18490	20695
-20	5232	5806	6426	11412	12697	14092	11747	13082	14532	12921	14390	15985
-15	4203	4633	5093	9067	10016	11038	9298	10280	11337	10228	11308	12471
-10	3405	3728	7073	7266	7973	8726	7425	8153	8929	8168	8968	9822
-5	2780	3025	3284	5872	6401	6959	5980	6522	7095	6578	7174	7805
0	2287	2473	2669	4782	5180	5596	4854	5260	5686	5339	5486	6254
5	1894	2037	2185	3924	4224	4536	3970	4275	4592	4367	4703	5052
10	1580	1689	1802	3242	3469	3703	3270	3500	3738	3597	3850	4111
15	1325	1410	1496	2696	2869	3045	2712	2886	3064	2983	3174	3370
20	1119	1184	1249	2257	2388	2521	2263	2395	2528	2489	2634	2781
25	950	1000	1050	1900	2000	2100	1900	2000	2100	2090	2200	2310
30	803	849	896	1592	1685	1778	1588	1680	1773	1747	1848	1951
35	682	725	769	1342	1427	1514	1335	1419	1506	1468	1561	1656
40	583	623	663	1138	1215	1295	1128	1206	1285	1241	1326	1414
45	501	537	574	969	1040	1114	959	1029	1103	1055	1132	1213
50	432	465	500	830	895	962	819	883	950	901	972	1045
55	374	405	437	714	773	835	703	761	823	773	837	905
60	326	354	383	617	671	728	606	659	716	666	725	787
65	285	310	337	535	585	637	524	573	625	577	630	687
70	250	273	298	466	512	560	456	500	548	502	550	602
75	220	241	265	408	449	493	398	439	482	438	482	530
80	194	214	236	358	396	437	349	386	426	384	424	468
85	172	191	210	316	350	388	307	341	377	338	375	415
90	153	170	188	279	311	345	271	302	335	298	332	369
95	137	152	169	248	277	309	240	268	299	264	295	329
100	123	137	153	221	247	277	213	239	268	235	263	294
105	110	123	138	197	222	249	190	214	240	209	235	264
110	99	111	125	177	199	224	170	192	216	187	211	238
115	89	101	113	159	179	203	152	173	195	168	190	215
120	81	92	103	143	162	184	137	156	177	151	171	194
125	73	83	94	129	147	167	124	141	160	136	155	176

Confidential, Do Not Disseminate.

TEMP. (℃)	0603-J-302-3150			0603-J-302-3200			0603-J-332-3150			0603-J-472-3340		
	Resistance(Ω)			Resistance(Ω)			Resistance(Ω)			Resistance(Ω)		
	Min.	Center	Max.	Min.	Center	Max.	Min.	Center	Max.	Min.	Center	Max.
-40	49621	57058	65446	51923	59789	68675	54583	62764	71991	92361	106771	123122
-35	37685	42966	48865	39262	44821	51039	41454	47263	53752	68990	79037	90322
-30	28946	32734	36926	30031	34000	38397	31841	36008	40618	52155	59236	67110
-25	22471	25214	28221	23220	26080	29220	24718	27735	31043	39875	44914	50464
-20	17620	19622	21798	18137	20216	22477	19382	21585	23978	30811	34429	38376
-15	13947	15420	17006	14303	15826	17467	15342	16962	18707	24047	26665	19495
-10	11138	12229	13393	11382	12505	13705	12252	13452	14733	18945	20854	22897
-5	8970	9783	10643	9135	9968	10850	9867	10761	11707	15059	16459	17944
0	7281	7890	8528	7390	8012	8664	8009	8679	9381	12071	13103	14188
5	5955	6413	6889	6025	6491	6975	6550	7054	7577	9753	10518	11314
10	4905	5250	5606	4947	5297	5658	5395	5775	6167	7940	8508	9094
15	4067	4329	4595	4090	4354	4623	4474	4762	5055	6510	6933	7365
20	3394	3592	3792	3404	3603	3804	3734	3952	4172	5374	5690	6008
25	2850	3000	3150	2850	3000	3150	3135	3300	3465	4465	4700	4935
30	2382	2520	2660	2375	2513	2653	2620	2772	2926	3691	3907	4125
35	2002	2129	2259	1991	2118	2247	2202	2342	2485	3070	3267	3468
40	1692	1809	1928	1678	1794	1913	1861	1989	2121	2569	2748	2932
45	1438	1544	1654	1422	1528	1637	1582	1699	1819	2162	2324	2492
50	1228	1325	1426	1212	1308	1408	1351	1457	1568	1829	1976	2129
55	1054	1142	1234	1037	1125	1216	1159	1256	1358	1555	1688	1827
60	909	989	1073	892	971	1055	999	1088	1181	1329	1449	1576
65	787	860	937	771	843	919	865	946	1031	1140	1249	1365
70	684	751	822	669	734	804	752	826	904	983	1082	1187
75	597	658	723	583	642	706	657	724	795	851	941	1036
80	523	579	638	509	564	623	576	637	702	740	821	908
85	460	511	566	447	497	551	506	562	622	646	720	799
90	406	453	503	394	439	489	447	498	553	566	633	706
95	360	402	449	348	390	435	396	443	494	498	559	625
100	320	359	402	309	347	389	352	395	442	439	495	556
105	285	321	360	275	310	348	314	353	396	389	439	495
110	255	288	324	245	277	313	280	317	357	345	392	443
115	229	259	293	220	249	282	251	285	322	308	350	397
120	206	234	265	197	224	255	226	257	291	275	314	357
125	185	211	240	177	202	231	204	232	264	246	282	322

Confidential, Do Not Disseminate.

TEMP. (℃)	0603-J-103-3435			0603-J-103-3550			0603-J-103-3610			0603-J-103-3700		
	Resistance(Ω)			Resistance(Ω)			Resistance(Ω)			Resistance(Ω)		
	Min.	Center	Max.	Min.	Center	Max.	Min.	Center	Max.	Min.	Center	Max.
-40	214196	248277	287060	237745	276463	320682	251042	292417	339760	272394	318091	370524
-35	158674	182221	208740	174358	200818	230715	183147	211262	243083	197169	227956	262891
-30	119003	135452	153791	129512	147801	168251	135359	154685	176327	144628	165615	189175
-25	90291	101898	114710	97361	110133	124270	101266	114691	129570	107421	121883	137946
-20	69258	77523	86557	74021	83024	92890	76634	86048	96377	80729	90791	101853
-15	53673	59606	66029	56876	63277	70222	58623	65281	72514	61344	68407	76093
-10	42000	46290	50891	44143	48727	53653	45304	50049	55152	47103	52099	57481
-5	33168	36290	39606	34585	37890	41407	35349	38753	42378	36526	40084	43878
0	26420	28704	31108	27340	29736	32260	27833	30288	32878	28589	31137	33827
5	21218	22897	24646	21796	23541	25361	22105	23884	25741	22575	24408	26323
10	17173	18410	19688	17516	18790	20107	17698	18992	20329	17975	19298	20667
15	14001	14916	15850	14184	15117	16071	14280	15228	16187	14426	15383	16362
20	11495	12171	12856	11568	12252	12943	11607	12294	12989	11665	12357	13058
25	9500	10000	10500	9500	10000	10500	9500	10000	10500	9500	10000	10500
30	7811	8269	8733	7760	8217	8679	7734	8190	8651	7694	8149	8609
35	6464	6881	7306	6381	6795	7218	6338	6751	7172	6274	6685	7105
40	5381	5759	6148	5280	5653	6038	5227	5599	5982	5150	5519	5899
45	4506	4847	5201	4394	4731	5080	4338	4671	5018	4254	4583	4927
50	3793	4101	4423	3679	3981	4297	3620	3919	4232	3534	3829	4138
55	3210	3468	3780	3096	3367	3653	3038	3306	3588	2953	3216	3493
60	2731	2981	3246	2619	2862	3121	2563	2803	3057	2480	2715	2965
65	2334	2559	2799	2227	2445	2678	2173	2388	2617	2094	2304	2528
70	2004	2207	2425	1902	2098	2309	1851	2044	2251	1777	1964	2166
75	1728	1912	2109	1632	1809	1999	1584	1757	1944	1515	1683	1864
80	1497	1662	1842	1407	1566	1738	1362	1517	1686	1298	1448	1611
85	1301	1451	1615	1217	1361	1517	1176	1315	1468	1116	1251	1398
90	1136	1272	1421	1058	1187	1329	1019	1145	1283	964	1085	1217
95	995	1118	1254	923	1039	1168	887	1000	1126	836	945	1065
100	875	987	1111	808	913	1030	775	877	991	728	826	934
105	772	874	987	709	805	912	679	772	875	636	724	823
110	683	776	880	625	713	810	597	681	776	557	637	727
115	606	692	787	553	632	721	527	604	689	490	563	644
120	540	618	705	491	563	644	467	536	615	433	499	573
125	482	554	634	437	503	577	414	478	550	383	443	511

Confidential, Do Not Disseminate.

TEMP. (℃)	0603-J-103-3970			0603-J-123-3550			0603-J-303-3900			0603-J-333-3900		
	Resistance(Ω)			Resistance(Ω)			Resistance(Ω)			Resistance(Ω)		
	Min.	Center	Max.	Min.	Center	Max.	Min.	Center	Max.	Min.	Center	Max.
-40	347980	409446	480564	285294	331755	384819	979719	1150512	1347700	1077691	1265563	1482471
-35	246010	286376	332532	209230	240981	276858	696875	809783	938632	766563	890762	1032496
-30	176418	203265	233611	155415	177361	201901	502682	578255	663527	552950	636081	729880
-25	128220	146281	166469	116833	132160	149124	367407	418566	475655	404148	460422	523221
-20	94372	106649	120222	88825	99629	111468	271882	306868	345491	299071	337555	380040
-15	70288	78712	87925	68252	75932	84266	203554	227700	254074	223909	250470	279481
-10	52941	58768	65073	52971	58472	64383	154083	170883	189041	169491	187971	207945
-5	40298	44358	48704	41502	45468	49688	117853	129623	142213	129638	142586	156434
0	30983	33828	36842	32808	35683	38712	91030	99326	108106	100133	109258	118916
5	24047	26050	28149	26156	28249	30433	70968	76842	82993	78065	84526	91292
10	18831	20246	21713	21020	22549	24128	55818	59988	64311	61398	65987	70742
15	14873	15874	16900	17021	18140	19285	44268	47236	50278	48694	51959	55305
20	11841	12550	13269	13882	14702	15532	35386	37499	39638	38925	41248	43602
25	9500	10000	10500	11400	12000	12600	28500	30000	31500	31350	33000	34650
30	7577	8028	8485	9312	9860	10415	22821	24178	25552	25103	26596	28107
35	6087	6491	6905	7657	8154	8662	18406	19623	20868	20247	21585	22955
40	4925	5284	5656	6335	6784	7246	14947	16033	17154	16442	17636	18869
45	4011	4330	4662	5273	5677	6096	12218	13183	14187	13440	14501	15606
50	3288	3570	3866	4414	4777	5156	10050	10905	11803	11055	11996	12984
55	2711	2960	3224	3715	4041	4383	8316	9073	9875	9148	9981	10863
60	2249	2469	2703	3143	3435	3745	6920	7591	8306	7612	8350	9137
65	1876	2070	2279	2672	2934	3214	5790	6385	7022	6369	7023	7724
70	1573	1744	1930	2283	2518	2771	4870	5397	5966	5357	5937	6563
75	1325	1477	1643	1959	2170	2399	4116	4584	5092	4528	5043	5602
80	1122	1257	1405	1688	1879	2085	3496	3912	4366	3845	4303	4803
85	955	1075	1206	1461	1633	1820	2983	333	3760	3281	3688	4136
90	816	922	1040	1269	1424	1594	2556	2886	3251	2811	3175	3576
95	700	795	901	1107	1247	1402	2199	2494	2822	2419	2744	3104
100	603	688	783	969	1096	1237	1900	2164	2459	2090	2381	2705
105	522	598	683	851	967	1095	1648	1885	2151	1813	2073	2366
110	453	521	598	750	855	972	1435	1648	1887	1578	1812	2076
115	395	456	525	664	759	866	1253	1445	1662	1379	1590	1828
120	346	401	463	589	676	773	1099	1272	1468	1209	1399	1615
125	303	353	410	524	603	693	967	1123	1301	1063	1235	1431

Confidential, Do Not Disseminate.

TEMP. (℃)	0603-J-333-3950			0603-J-403-3950			0603-J-473-3950			0603-J-493-3950		
	Resistance(Ω)			Resistance(Ω)			Resistance(Ω)			Resistance(Ω)		
	Min.	Center	Max.	Min.	Center	Max.	Min.	Center	Max.	Min.	Center	Max.
-40	1127690	1326137	1555607	1366897	1607439	1885525	1606104	1888741	2215562	1674449	1969113	2309841
-35	798632	929204	1078420	968038	1126307	1307176	1137445	1323411	1535932	1185847	1379726	1601291
-30	573675	660673	758982	695364	800816	919954	817052	840958	1080946	851820	980999	1126943
-25	417614	476246	541751	506199	577268	656668	594784	678290	771585	620094	707153	804419
-20	307845	347769	391890	373145	421539	475018	438446	495308	558146	457103	516385	581897
-15	229625	257064	287062	278333	311592	347954	327041	366121	408846	340958	381701	426244
-10	173198	192211	212777	209937	232983	257912	246676	273755	303046	257173	285404	315942
-5	132019	145286	159487	160023	176104	193317	188027	206922	227148	196028	215728	236813
0	101635	110948	120811	123194	134482	146438	144753	158017	172064	150913	164741	179386
5	78984	85551	92433	95738	103698	112040	112492	121845	131647	117279	127030	137249
10	61930	66576	71392	75066	80698	86536	88203	94821	101680	91956	98855	106007
15	48969	52263	55638	59357	63349	67440	69744	74435	79242	72712	77602	82614
20	39033	41367	43730	47312	50141	53006	55592	58916	62283	57958	61423	64933
25	31350	33000	34650	38000	40000	42000	44650	47000	49350	46550	49000	51450
30	25032	26523	28032	30342	32149	33978	35651	37775	39924	37168	39382	41623
35	20133	21468	22834	24404	26022	27678	28675	30576	32522	29895	31877	33905
40	16307	17495	18723	19766	21206	22694	23225	24917	26666	24213	25977	27800
45	13295	14349	15447	16115	17393	18724	18935	20436	22001	19741	21306	22937
50	10908	11841	12821	13222	14353	15541	15536	16864	18261	16197	17582	19038
55	9004	9829	10702	10914	11914	12972	12824	13999	15242	13370	14594	15891
60	7475	8204	8982	9061	9945	10887	10647	11685	12792	11100	12182	13337
65	6240	6885	7577	7564	8345	9185	8888	9806	10792	9266	10223	11251
70	5237	5807	6424	6348	7039	7787	7459	8271	9149	7776	8623	8539
75	4417	4923	5472	5354	5967	6633	6291	7011	7794	6559	7309	8126
80	3743	4192	4683	4537	5081	5675	5332	5971	6669	5558	6225	6953
85	3187	3586	4025	3863	4347	4878	4539	5107	5732	4733	5325	5976
90	2726	3081	3473	3304	3734	4210	3882	4388	4947	4047	4575	5157
95	2341	2658	3010	2838	3221	3648	3334	3785	4286	3476	3946	4469
100	2019	2302	2618	2447	2790	3173	2875	3278	3729	2998	3418	3887
105	1748	2001	2286	2119	2426	2770	2489	2850	3255	2595	2971	3394
110	1519	1746	2002	1841	2117	2427	2163	2487	2850	2255	2593	2973
115	1325	1529	1760	1606	1853	2143	1887	2178	2507	1967	2270	2614
120	1159	1343	1553	1405	1628	1882	1651	1913	2211	1721	1995	2306
125	1018	1184	1374	1234	1435	1665	1450	1687	1957	1512	1758	2040

Confidential, Do Not Disseminate.

TEMP. (℃)	0603-J-503-3950			0603-J-513-3950			0603-J-683-3950			0603-J-104-3950		
	Resistance(Ω)			Resistance(Ω)			Resistance(Ω)			Resistance(Ω)		
	Min.	Center	Max.	Min.	Center	Max.	Min.	Center	Max.	Min.	Center	Max.
-40	1708621	2009299	2356981	1742794	2049485	2404120	2323725	2732646	3205494	3417243	4018597	4713961
-35	1210048	1407884	1633970	1234249	1436042	1666650	1645665	1914722	2222199	2420096	2815768	3267940
-30	869205	1001020	1149942	886589	1021040	1172941	1182118	1361387	1563921	1738409	2002039	2299884
-25	632749	721585	820835	645404	736016	837252	860538	981355	1116336	1265498	1443169	1641671
-20	466431	526923	593773	475760	537462	605648	634347	716616	807531	932863	1053847	1187545
-15	347916	389491	434943	354875	397280	443642	473166	529707	591522	695832	778981	869885
-10	262422	291229	322390	267670	297053	328838	356893	396071	438450	524843	582457	644779
-5	200029	220130	241646	204029	224533	246479	272039	299377	328639	400057	440260	483293
0	153993	168103	183047	157073	171465	186708	209430	228620	248944	307986	336206	366094
5	119672	129623	140050	122066	132215	142851	162754	176287	190468	239345	259246	280099
10	93833	100873	108170	95709	102890	110334	127612	137187	147112	187665	201746	216341
15	74196	79186	84300	75680	80769	85986	100907	107693	114648	148392	158371	168600
20	59141	62677	66258	60323	63930	67583	80431	85240	90111	118281	125353	132516
25	47500	50000	52500	48450	51000	53550	64600	68000	71400	95000	100000	105000
30	37927	40186	42473	38686	40989	43322	51581	54653	57763	75854	80371	84945
35	30505	32528	34597	31115	33178	35289	41487	44238	47052	61011	65055	69195
40	24707	26507	28368	25201	27037	28935	33602	36050	38580	49414	53015	56735
45	20144	21741	23405	20547	22175	23873	27396	29567	31831	40288	43481	46811
50	16528	17941	19426	16858	18300	19815	22478	24400	26420	33056	35882	38852
55	13643	14892	16215	13916	15190	16540	18554	20253	22053	27285	29784	32431
60	11326	12431	13609	11553	12679	13881	15404	16906	18508	22653	24862	27218
65	9455	10432	11481	9644	10640	11710	12859	14187	15614	18910	20864	22961
70	7935	8799	9733	8093	8975	9928	10791	11967	13238	15869	17598	19467
75	6692	7458	8291	6826	7608	8457	9102	10143	11276	13385	14917	16583
80	5672	6352	7095	5785	6479	7237	7714	8638	9649	11344	12703	14190
85	4829	5433	6098	4926	5542	6220	6568	7389	8293	9658	10867	12196
90	4130	4668	5263	4213	4761	5368	5617	6348	7157	8260	9336	10525
95	3547	4027	4560	3618	4107	4651	4824	5476	6202	7094	8054	9120
100	3059	3488	3967	3120	3557	4046	4160	4743	5394	6118	6975	7933
105	2648	3032	3463	2701	3093	3532	3602	4124	4710	5296	6064	6926
110	2301	2646	3034	2347	2699	3095	3130	3598	4126	4603	5291	6068
115	2007	2317	2667	2047	2363	2721	2730	3151	3628	4014	4633	5335
120	1757	2035	2353	1792	2076	2400	2389	2768	3200	3513	4071	4705
125	1543	1794	2082	1573	1830	2123	2098	2440	2831	3085	3588	4163

Confidential, Do Not Disseminate.

TEMP. (℃)	0603-J-104-4400			0603-J-154-4000			0603-J-204-4055			0603-J-224-3950		
	Resistance(Ω)			Resistance(Ω)			Resistance(Ω)			Resistance(Ω)		
	Min.	Center	Max.	Min.	Center	Max.	Min.	Center	Max.	Min.	Center	Max.
-40	5139682	6120926	7271282	5363678	6316412	7419782	7517382	8866341	10431221	7517934	8840914	10370715
-35	3499631	4118517	4834732	3782010	4405929	5119944	5275215	6154043	7161331	5324212	6194690	7189469
-30	2420878	2816706	3269062	2705349	3119163	3587285	3756126	4336094	4993097	3824500	4404486	5059746
-25	1699704	1956102	2245549	1961495	2239151	2549720	2711341	3098593	3532303	2784095	3174973	3611676
-20	1210156	1378150	1565542	1440347	1628603	1836861	1982531	2243858	2533282	2052298	2318463	2612599
-15	873020	984222	1106816	1070391	1199232	1340223	1467312	1645340	1840356	1530831	1713758	1913748
-10	637670	711944	792882	804484	893392	989646	1098479	1220777	1353299	1154655	1281406	1418515
-5	471255	521247	575101	611107	672898	739085	831285	915906	1006618	880126	968573	1063244
0	352147	286010	422071	468909	512109	557892	635535	694439	756905	677569	739653	805407
5	265914	288964	313226	363241	393586	425400	490593	731788	575002	526558	570340	616219
10	202799	218539	234911	283934	305319	327494	382185	411090	441076	412864	443841	475949
15	156126	166888	177946	223848	238944	254420	300323	320638	341471	326462	348417	370919
20	121272	128622	136077	177915	188568	199361	237944	252217	266677	260218	275777	291536
25	95000	100000	105000	142500	150000	157500	190000	200000	210000	209000	220000	231000
30	73934	79395	82915	113457	120224	127076	150803	159812	168935	166879	176817	186879
35	58009	61946	65984	91004	97053	103246	120593	128632	136864	134223	143122	152229
40	45868	49317	52893	73511	78886	84442	97126	104256	111629	108711	116632	124818
45	36537	39546	42695	59779	64538	69501	78759	85059	91632	88634	95659	102983
50	29310	31927	34692	48925	53129	57550	64282	69835	75678	72722	78940	85475
55	23671	25946	28368	40287	43997	47928	52791	57681	62867	60028	65526	71348
60	19239	21216	23338	33368	36641	40135	43611	47917	52517	49836	54696	59879
65	15734	17452	19310	27792	30681	33786	36232	40025	44104	41603	45900	50515
70	12943	14438	16066	23271	25823	28584	30264	33608	37228	34913	38716	42827
75	10707	12010	13438	19585	21843	24300	25411	28362	31578	29446	32817	36482
80	8904	10042	11297	16564	18564	20753	21441	24050	26910	24956	27956	31218
85	7444	8439	9543	14074	15848	17802	18178	20488	23035	21248	23907	26830
90	6254	7126	8099	12013	13590	15335	15481	17531	19802	18172	20539	23156
95	5279	6044	6904	10297	11701	13264	13243	15064	17093	15607	17718	20064
100	4476	5150	5911	8863	10116	11517	11375	12997	14813	13459	15345	17453
105	3812	4407	5081	7659	8779	10037	9810	11258	12886	11652	13341	15237
110	3260	3786	4385	6644	7647	8780	8493	9787	11250	10126	11641	13350
115	2799	3265	3799	5785	6685	7706	7381	8540	9857	8831	10193	11736
120	2413	2827	3303	5054	5864	6786	6437	7478	8665	7729	8956	10352
125	2088	2456	2882	4431	5161	5995	5633	6569	7642	6787	7894	9159

Confidential, Do Not Disseminate.

TEMP. (℃)	0603-J-304-4055			0603-J-334-4100			0603-J-374-4000			0603-J-404-4100		
	Resistance(Ω)			Resistance(Ω)			Resistance(Ω)			Resistance(Ω)		
	Min.	Center	Max.	Min.	Center	Max.	Min.	Center	Max.	Min.	Center	Max.
-40	11276073	13299512	15646832	12920419	15258177	17973870	13230406	15580484	18302129	15661114	18494760	21786509
-35	7912823	9231064	10741996	9031151	10547726	12288178	9328959	10867959	12629195	10946850	12785123	14894761
-30	5634189	6504140	7489645	6406285	7403030	8533470	6673195	7693937	8848635	7765193	8973369	10343600
-25	4067012	4647890	5298454	4607648	5270550	6013752	4838355	5523240	6289310	5585028	6388546	7289396
-20	2973796	3365786	3799923	3357424	3803042	4297035	3552857	4017222	4530924	4069605	4609748	5208528
-15	2200968	2468010	2760534	2476615	2779050	3110621	2640298	2958106	3305883	3001957	3368545	3770449
-10	1647719	1831166	2029949	1848130	2055127	2279594	1984393	2203701	2441127	2240157	2491062	2763145
-5	1246927	1373859	1509928	1394271	1536980	1600060	1507397	1659815	1823076	1690026	1863006	2048558
0	953302	1041658	1135357	1062778	1161762	1266790	1156641	1263203	1376133	1288216	1408196	1535503
5	735889	797683	862503	818044	887025	959418	895994	970845	1049320	991569	1075182	1162931
10	573277	616635	661614	635514	683744	733794	700371	753120	807818	770321	828780	889447
15	450485	480957	512206	498057	531831	566475	552158	589395	627569	603706	644644	686636
20	356917	378325	400016	393590	417231	441186	438856	465136	491757	477079	505734	534771
25	285000	300000	315000	313500	330000	346500	351500	370000	388500	380000	400000	420000
30	226204	239718	253403	248188	263034	278071	279861	196553	313454	300834	318829	337056
35	180890	192948	205296	197977	211206	224755	224477	239398	254673	239973	256007	272431
40	145689	156384	167444	159069	170783	182901	181326	194585	208291	192811	207009	221698
45	118139	127588	137448	128689	139021	149808	147456	159194	171437	155987	168511	181585
50	96422	104752	113517	104797	113890	123463	120682	131051	141956	127026	138048	149652
55	79186	86522	94301	85876	93870	102352	99375	108525	118223	104092	113782	124063
60	65417	71876	78775	70793	77820	85330	82308	90382	99000	85810	94327	103430
65	54348	60037	66156	58693	64872	71523	68553	75679	83338	71144	78633	86694
70	45397	50412	55812	48928	54367	60258	57402	63698	70507	59307	65899	73041
75	38116	42543	47366	41002	45794	51019	48310	53879	59939	49699	55508	61841
80	32162	36076	40365	34532	38761	43400	40858	45790	51190	41857	46983	52606
85	27267	30732	34552	29222	32962	37086	34717	39093	43911	35421	39953	44953
90	23222	26296	29703	24843	28155	31828	29631	33521	37826	30113	34127	38580
95	19864	22596	25640	21214	24153	27430	25400	28863	32717	25714	29276	33248
100	17063	19496	22220	18191	20804	23733	21863	24953	28408	22050	25217	28767
105	14715	16886	19329	15663	17991	20614	18893	21655	24756	18986	21808	24986
110	12740	14681	16876	13539	15618	17970	16389	18863	21656	16411	18930	21782
115	11071	12810	14785	11747	13607	15721	14269	16490	19008	14239	16493	19056
120	9655	11216	12998	10229	11896	13800	12467	14464	16739	12399	14420	16728
125	8449	9854	11463	8938	10436	12154	1093	12729	14787	10834	12650	14732

Confidential, Do Not Disseminate.

TEMP. (℃)	0603-J-474-4055			0603-J-504-4100			0603-J-564-4100			0603-G-1003-4400		
	Resistance(Ω)			Resistance(Ω)			Resistance(Ω)			Resistance(Ω)		
	Min.	Center	Max.	Min.	Center	Max.	Min.	Center	Max.	Min.	Center	Max.
-40	17665847	20835901	24513370	19576392	23118450	27233137	21925559	25892664	30501113	4150784	4572000	5033946
-35	12396756	14462000	16829127	13683562	15981403	18618451	15325590	17899172	20852666	2923389	3197096	3495030
-30	8826897	10189820	11733778	9706492	11216712	12929500	10871271	12562717	14481040	2088712	2268652	2463108
-25	6371652	7281695	8300912	6981285	7985682	9111745	7819039	8943964	10205155	1511538	1630954	1759101
-20	4658947	5273065	5953213	5087006	5762185	6510660	5697447	6453647	7291939	1106452	1186288	1271376
-15	3448184	3866550	4324836	3752446	4210681	4713062	4202740	4715963	5278629	818352	872016	928828
-10	2581426	2868826	3180254	2800196	3113828	3453931	3136220	3487487	3868403	611004	647200	685266
-5	1953520	2152379	2365553	2112532	2328758	2560698	2366036	2608209	2867981	460166	484614	510157
0	1493507	1631931	1778726	1610270	1760245	1919378	1803502	1971475	2149704	349367	365866	382991
5	1152893	1249703	1351255	1239467	1343978	1453665	1388197	1505255	1628103	267255	278350	289790
10	898134	966061	1036528	962901	1035975	1111808	1078449	1160292	1245225	205905	213315	220903
15	705760	753499	802457	754632	805804	858295	845188	902501	961291	159723	164616	169591
20	559169	592710	626691	596348	632168	668463	667910	708028	748679	124714	127887	131088
25	446500	470000	493500	475000	500000	525000	532000	560000	588000	98000	100000	102000
30	354387	375558	396998	376042	398536	421320	421167	446361	471879	76749	78692	80651
35	283394	302285	321630	299966	320009	340538	335962	358410	381403	60490	62311	64161
40	228246	245001	262328	241014	258762	277122	269935	289813	310377	47976	49646	51353
45	185085	199888	215335	194984	210639	226981	218382	235915	254219	38290	39798	41349
50	1510621	164112	177843	158783	172560	187064	177837	193268	209512	30751	32100	33495
55	124059	135551	147738	130115	142227	155079	145729	159295	173688	24851	26050	27296
60	102487	112605	123414	107262	117909	129288	120134	132058	144802	20210	21271	22379
65	85145	94058	103645	88930	98291	108367	99601	110086	121372	16539	17476	18458
70	71121	78979	87486	74134	82374	91301	83030	92259	102257	13623	14449	15319
75	59715	66651	74207	62124	69385	77301	69579	77711	86578	11292	12021	12792
80	50387	56519	63238	52321	58729	65758	58599	65777	73649	9421	10065	10749
85	42718	48147	54131	44276	49942	56191	4959	55935	62934	7912	8482	9089
90	36381	41198	46535	37641	42659	48225	42158	47778	54012	6690	7195	7736
95	31120	35401	40169	32142	36595	41560	35999	40986	46547	5693	6143	6625
100	26731	30543	34811	27563	31522	35959	30870	35304	40274	4879	5280	5712
105	23054	26455	30282	23732	27259	31233	26580	30531	34981	4210	4569	4957
110	19960	23001	26439	20514	23663	27227	22975	26503	30495	3658	3981	4331
115	17345	20069	23164	17799	20616	23820	19934	23090	26678	3200	3492	3809
120	15126	17572	20363	15499	18024	20910	17358	20187	23419	2820	3085	3373
125	13237	15438	17959	13543	15812	18415	15168	17709	20625	2503	2745	3009

Confidential, Do Not Disseminate.

TEMP. (℃)	0603-F-1002-3435			0603-J-103-4050			0603-J-223-3900			-----		
	Resistance(Ω)			Resistance(Ω)			Resistance(Ω)			Resistance(Ω)		
	Min.	Center	Max.	Min.	Center	Max.	Min.	Center	Max.	Min.	Center	Max.
-40	181159	188442	195998	285767	334202	389869	613676	717152	835981	—	—	—
-35	139135	144343	149731	209536	242710	280433	446709	516929	596692	—	—	—
-30	107666	111407	115267	154936	177797	203522	328945	377068	431151	—	—	—
-25	83926	86624	89400	115531	131380	149031	244886	278161	315168	—	—	—
-20	65886	67838	69840	86873	97923	110104	184201	207395	232927	—	—	—
-15	52079	53495	54944	65867	73612	82063	139917	156201	173945	—	—	—
-10	41440	42469	43518	50349	55805	61697	107271	118775	131185	—	—	—
-5	33187	33934	34695	38797	42655	46780	82970	91141	99867	—	—	—
0	26743	27285	27836	30130	32869	35766	64714	70543	76705	—	—	—
5	21679	22072	22470	23578	25527	27568	50879	55051	59416	—	—	—
10	17676	17960	18246	18588	19977	21416	40306	43298	46396	—	—	—
15	14493	14696	14900	14760	15750	16764	32162	34310	36508	—	—	—
20	11947	12091	12235	11802	12507	13220	25842	27381	28939	—	—	—
25	9900	10000	10100	9500	10000	10500	20900	22000	23100	—	—	—
30	8214	8313	8411	7597	8049	8507	16795	17792	18801	—	—	—
35	6849	6944	7039	6116	6521	6935	13582	14478	15393	—	—	—
40	5738	5828	5918	4955	5315	5688	11051	11851	12677	—	—	—
45	4830	4913	4998	4038	4358	4691	9045	9756	10497	—	—	—
50	4083	4161	4239	3311	3594	3891	7444	8075	8738	—	—	—
55	3467	3538	3611	2730	2980	3244	6160	6719	7310	—	—	—
60	2956	3021	3088	2263	2483	2719	5123	5618	6146	—	—	—
65	2530	2590	2652	1885	2080	2289	4282	4720	5191	—	—	—
70	2174	2229	2285	1578	1750	1936	3596	3984	4404	—	—	—
75	1875	1925	1977	1327	1480	1645	3034	3378	3752	—	—	—
80	1623	1669	1716	1121	1256	1404	2570	2876	3210	—	—	—
85	1409	1451	1494	951	1071	1202	2187	2459	2757	—	—	—
90	1228	1267	1306	810	916	1034	1869	2110	2377	—	—	—
95	1074	1109	1145	693	787	892	1603	1818	2057	—	—	—
100	942	974	1007	595	678	772	1380	1572	1787	—	—	—
105	829	858	888	512	587	671	1192	1364	1557	—	—	—
110	731	758	785	442	509	584	1034	1188	1361	—	—	—
115	647	671	696	383	443	511	899	1037	1194	—	—	—
120	574	596	619	333	386	447	785	909	1050	—	—	—
125	510	531	552	290	338	393	687	799	927	—	—	—

Confidential, Do Not Disseminate.

TEMP. (℃)	0805-J-202-3200			0805-J-222-3200			0805-J-472-3435			0805-J-472-3660		
	Resistance(Ω)			Resistance(Ω)			Resistance(Ω)			Resistance(Ω)		
	Min.	Center	Max.	Min.	Center	Max.	Min.	Center	Max.	Min.	Center	Max.
-40	34616	39860	45783	38077	43846	50362	100672	116690	134918	123464	144014	167565
-35	26175	29880	34026	28792	32868	37428	74577	85644	98108	89680	103578	119331
-30	20021	22667	25598	22023	24933	28158	55931	63663	72282	66003	75513	86176
-25	15480	17387	19480	17028	19126	21428	42437	47892	53914	49181	55757	63055
-20	12091	13477	14985	13301	14825	16483	32551	36436	40682	37075	41666	46710
-15	9535	10551	11645	10489	11606	12809	25226	28015	31034	28256	31490	35006
-10	7588	8337	9136	8347	9170	100150	19470	21756	23919	21759	24053	26524
-5	6090	6645	7234	6699	7310	7957	15589	17056	18615	16919	18559	20306
0	4927	5341	5776	5420	5875	6354	12417	13491	14621	13278	14456	15699
5	4017	4327	4650	4418	4760	5115	9972	10761	11584	10511	11361	12250
10	3298	3532	3772	3628	3885	4149	8071	8653	9253	8390	9006	9642
15	2727	2903	3082	3000	3193	3390	3580	7010	7450	9450	7198	7653
20	2269	2402	2536	2496	1642	2789	5403	5721	6042	5470	5795	6123
25	1900	2000	2100	2090	2200	2310	4465	4700	4935	4465	4700	4935
30	1583	1676	1769	1742	1843	1946	3671	3887	4104	3625	3839	4055
35	1327	1412	1498	1460	1553	1648	3038	3234	3434	2962	3156	3353
40	1119	1196	1275	1231	1316	1403	2529	2707	2889	2437	2611	2790
45	948	1019	1091	1043	1120	1201	2118	2278	2444	2017	2172	2335
50	808	872	938	889	959	1032	1783	1928	2079	1678	1818	1964
55	692	750	811	761	825	892	1509	1639	1777	1405	1530	1662
60	595	648	703	654	712	774	1283	1401	1525	1183	1294	1413
65	514	562	613	565	618	674	1097	1203	1316	1001	1100	1207
70	446	490	536	490	538	590	942	1037	1140	851	940	1035
75	388	428	471	427	471	518	812	898	991	726	806	892
80	340	376	415	374	414	457	703	781	866	623	695	772
85	298	331	367	328	364	404	612	682	759	37	601	671
90	263	293	326	289	322	358	534	598	668	464	522	586
95	232	260	290	255	286	319	468	526	589	403	455	513
100	206	231	259	227	254	285	411	464	522	352	399	451
105	183	206	232	202	227	255	363	411	464	308	350	397
110	164	185	209	180	203	229	321	365	414	270	309	352
115	146	166	188	161	183	207	285	325	370	238	273	312
120	131	150	170	145	164	187	254	290	332	210	242	278
125	118	135	154	130	148	169	227	260	298	186	215	248

Confidential, Do Not Disseminate.

TEMP. (℃)	0805-J-502-3435			0805-J-103-3435			0805-J-103-3550			0805-J-103-3970		
	Resistance(Ω)			Resistance(Ω)			Resistance(Ω)			Resistance(Ω)		
	Min.	Center	Max.	Min.	Center	Max.	Min.	Center	Max.	Min.	Center	Max.
-40	107098	124138	143530	214196	248277	287060	237745	276463	320682	347980	409446	480564
-35	79337	91111	104370	158674	182221	208740	174358	200818	230715	246010	286376	332532
-30	59501	67726	76895	119003	135452	153791	129512	147801	168251	176418	203265	233611
-25	45145	50949	57355	90291	101898	114710	97361	110133	124270	128220	146281	166469
-20	34629	38761	43278	69258	77523	86557	74021	83024	92890	94372	106649	120222
-15	26836	29803	33015	53673	59606	66029	56876	63277	70222	70288	78712	87925
-10	21000	23145	25446	42000	46290	50891	44143	48727	53653	52941	58768	65073
-5	16584	18145	19803	33168	36290	39606	34585	37890	41407	40298	44358	48704
0	13210	14352	15554	26420	28704	31108	27340	29736	32260	30983	33828	36842
5	10609	11448	12323	21218	22897	24646	21796	23541	25361	24047	26050	28149
10	8586	9205	9844	17173	18410	19688	17516	18790	20107	18831	20246	21713
15	7000	7458	7925	14001	14916	15850	14184	15117	16071	14873	15874	16900
20	5747	6086	6428	11495	12171	12856	11568	12252	12943	11841	12550	13267
25	4750	5000	5250	9500	10000	10500	9500	10000	10500	9500	10000	10500
30	3906	4135	4366	7811	8269	8733	7760	8217	8679	7577	8028	8485
35	3232	3440	3653	6464	6881	7306	6381	6795	7218	6087	6491	6905
40	2690	2879	3074	5381	5759	6148	5280	5653	6038	4925	5284	5656
45	2253	2423	2600	4506	4847	5201	4394	4731	5080	4011	4330	4662
50	1897	2051	2211	3793	4101	4423	3679	3981	4297	3288	3570	3866
55	1605	1744	1890	3210	3488	3780	3096	3367	3653	2711	2960	3224
60	1365	1490	1623	2731	2981	3246	2619	2862	3121	2249	2469	2703
65	1167	1280	1400	2334	2559	2799	2227	2445	2678	1876	2070	2279
70	1002	1104	1213	2004	2207	2425	1902	2098	2309	1573	1744	1930
75	864	956	1055	1728	1912	2109	1632	1809	1999	1325	1477	1643
80	748	831	921	1497	1662	1842	1407	1566	1738	1122	1257	1405
85	651	726	807	1301	1451	1615	1217	1361	1517	955	1075	1206
90	568	636	710	1136	1272	1421	1058	1187	1329	816	922	1040
95	497	559	627	995	1118	1254	923	1039	1168	700	795	901
100	437	494	555	875	987	1111	808	913	1030	603	688	783
105	386	437	494	772	874	987	709	805	912	522	598	683
110	341	388	440	683	776	880	625	713	810	453	521	598
115	303	346	393	606	62	787	553	632	721	395	456	525
120	270	309	353	540	618	705	491	563	644	346	401	463
125	241	277	317	482	554	634	437	503	577	303	353	410

Confidential, Do Not Disseminate.

TEMP. (℃)	0805-J-123-3500			0805-J-123-3970			0805-J-153-3630			0805-J-223-3900		
	Resistance(Ω)			Resistance(Ω)			Resistance(Ω)			Resistance(Ω)		
	Min.	Center	Max.	Min.	Center	Max.	Min.	Center	Max.	Min.	Center	Max.
-40	272644	316602	366727	417576	491335	576677	383456	446905	519551	718461	843708	988314
-35	200828	231012	265068	295121	343651	399039	279262	322294	371028	511042	593841	688330
-30	149800	170519	194165	211702	243918	280333	206049	235574	268657	368633	424054	486587
-25	113066	127769	144023	153864	175537	199762	153904	174377	197079	269432	306948	348814
-20	86293	96703	108098	113246	127979	144266	116289	130620	146352	199380	225037	253360
-15	66553	73985	82041	84346	94454	105510	88826	98945	109941	149273	166980	186321
-10	51838	57183	62921	63529	70521	78088	68546	75746	83492	112994	125314	138630
-5	40754	44623	48737	48358	53229	58445	53411	58567	64060	86425	95057	104289
0	32324	35139	38105	37178	40593	44210	41999	45713	49630	66756	72839	79277
5	25852	27910	30057	28856	31260	33779	33312	35999	38804	52044	56350	60861
10	20839	22349	23909	22598	24296	26056	26639	28589	30605	40932	43992	47161
15	16925	18035	19169	17847	19049	20281	21469	22887	24338	32462	34640	36870
20	13844	14660	15486	14209	15060	15921	17430	18462	19506	25950	27499	29068
25	11400	12000	12600	11400	12000	12600	14250	15000	15750	20900	22000	23100
30	9339	9888	10443	9092	634	10182	11587	12271	12962	16735	17731	18738
35	7700	8199	8707	7305	7790	8286	9486	10104	10736	13498	14390	15303
40	6388	6839	7303	5910	6341	6787	7815	8372	8945	10961	11757	12579
45	5331	5737	6159	4814	5196	5594	6478	6977	7496	8960	9667	10404
50	4474	4839	5221	3946	4284	4639	5401	5848	6317	7370	7997	8656
55	3774	4103	4449	3254	3552	3869	4528	4928	5350	6098	6654	7242
60	3201	3496	3809	2699	2962	3244	3816	4174	4555	5075	5567	6091
65	2727	2993	3276	2251	2484	2734	3233	3553	3896	4246	4682	5150
70	2335	2574	2830	1887	2093	2316	2752	3039	3347	3571	3958	4375
75	2008	2223	2456	1590	1773	1971	2353	2610	2889	3019	3362	3734
80	1734	1928	2139	1347	1509	1686	2021	2252	2503	2564	2869	3202
85	1504	1679	1870	1146	1289	1448	1744	1951	2178	2187	2459	2757
90	1309	1468	1641	979	1107	1248	1510	1697	1902	1874	2116	2384
95	1144	1288	1446	840	954	1081	1313	1482	1667	1613	1829	2069
100	1003	1134	1278	724	826	940	1146	1298	1467	1393	1587	1803
105	883	1001	1133	626	717	820	1004	1141	1295	1209	1382	1577
110	780	887	1008	544	626	718	882	1007	1147	1052	1208	1384
115	691	789	899	474	547	634	778	891	1019	919	1060	1219
120	614	703	804	415	481	556	688	791	908	806	933	1077
125	547	629	722	364	423	491	611	705	811	709	823	954

Confidential, Do Not Disseminate.

TEMP. (℃)	0805-J-223-4055			0805-J-233-3900			0805-J-303-3900			0805-J-333-4055		
	Resistance(Ω)			Resistance(Ω)			Resistance(Ω)			Resistance(Ω)		
	Min.	Center	Max.	Min.	Center	Max.	Min.	Center	Max.	Min.	Center	Max.
-40	826912	975298	1147434	751118	882059	1033237	99719	1150512	1347700	1240368	1462946	1721152
-35	580274	676945	787746	534271	620834	719618	696875	809783	938632	870411	1015417	1181620
-30	413174	476970	549241	385389	443329	508704	502682	578255	663527	619761	715455	823861
-25	298248	340845	388553	281679	320900	364669	367407	418566	475655	447371	511268	582830
-20	218078	246824	278661	208443	235266	264876	271882	306868	345491	327118	370236	417992
-15	161404	180987	202439	156058	174570	194790	203554	227700	254074	242107	271481	303659
-10	120833	134285	148863	118130	131010	144931	154083	170883	189041	181249	201428	223294
-5	91441	100750	110728	90354	99378	109030	117853	129623	142213	137162	151125	166092
0	69909	76388	83260	69790	76150	82881	91030	99326	108106	104863	114582	124889
5	53965	59497	63250	54409	58912	63628	70968	76842	82993	80948	87745	94875
10	42040	45220	48518	42793	45991	49305	55817	59988	64311	63060	67830	72778
15	33036	35270	37562	33938	36214	38546	44267	47236	50278	49553	52905	56343
20	26174	27744	29334	27129	28749	30389	35386	37499	39638	39261	41616	44002
25	20900	22000	23100	21850	23000	24150	28500	30000	31500	31350	33000	34650
30	16588	17579	18583	17496	18537	19590	22821	24178	25552	24882	26369	27874
35	13265	14150	15055	14111	15044	15999	18406	19623	20868	19898	21224	22583
40	10684	11468	12279	11460	12292	13151	14947	16033	17154	16026	17202	18419
45	8664	9356	10080	9367	10107	10877	12218	13183	14187	12995	14035	15119
50	7071	7682	8325	7705	8361	9049	10050	10905	11803	10606	11523	12487
55	5807	6345	6915	6375	6956	7571	8316	9073	9875	8711	9517	10373
60	4797	5271	5777	5306	5820	6368	6920	7591	8306	7196	7906	8665
65	3986	4403	4851	4439	4895	5384	5790	6385	7022	5978	6604	7277
70	3329	3697	4095	3734	4138	4574	4870	5397	5966	4994	5545	6143
75	2795	3120	3474	3156	3515	3904	4116	4584	5092	4193	4680	5210
80	2359	2646	2960	2680	2999	3347	3496	3912	4366	3538	3968	4440
85	2000	2254	2534	2287	2571	2882	2893	3353	3760	2999	3381	3801
90	1703	1928	2178	1959	2213	2492	2556	2886	3251	2554	2893	3267
95	1457	1657	1880	1686	1912	2164	2199	2494	2822	2185	2486	2820
100	1251	1430	1629	1457	1659	1885	1900	2164	2459	1877	2145	2444
105	1079	1238	1417	1263	1445	1649	1648	1885	2151	1619	1857	2126
110	934	1077	1238	1100	1263	1447	1435	1648	1887	1401	1615	1856
115	812	939	1084	961	1108	1274	1253	1445	1668	1218	1409	1626
120	708	823	953	842	975	1126	1099	1272	1468	1062	1234	1430
125	620	723	841	741	861	997	967	1123	1301	929	1084	1261

Confidential, Do Not Disseminate.

TEMP. (℃)	0805-J-473-4000			0805-J-503-4000			0805-J-563-4000			0805-J-683-3950		
	Resistance(Ω)			Resistance(Ω)			Resistance(Ω)			Resistance(Ω)		
	Min.	Center	Max.	Min.	Center	Max.	Min.	Center	Max.	Min.	Center	Max.
-40	1680619	1979143	2324865	1787893	2105417	2473261	2002440	2358127	2770052	2323725	2732646	3205494
-35	1185030	1380524	1604249	1260670	1468643	1706648	1411951	1644880	1911446	1645665	1914722	2222199
-30	847676	977338	1124016	901783	1039721	1195762	1009997	1164488	1339253	1182118	1361387	1563921
-25	614602	701601	798912	653832	746384	849907	732292	835950	951896	860538	981355	1116336
-20	451309	510296	575550	480116	542868	612287	537730	608012	685762	634347	716616	807531
-15	335389	375759	419936	356797	399744	446741	399613	447713	500350	473166	529707	591522
-10	252072	279930	310089	268161	297797	329882	300341	333533	369468	356893	396071	438450
-5	191480	210841	231580	203702	224299	246362	228146	251215	275925	272039	299377	328639
0	146925	160461	174806	156303	170703	185964	175059	191187	208280	209430	228620	248944
5	113815	123324	133292	121080	131195	141800	135610	146939	158816	162754	176287	190468
10	88966	95667	102615	94645	101773	10165	106002	11396	122264	127612	137187	147112
15	70139	74869	79718	74616	79648	84807	83570	89206	94983	100907	107693	114648
20	55747	59085	62466	59305	62856	66454	66421	70399	74428	80431	85240	90111
25	44650	47000	49350	47500	50000	52500	53200	56000	58800	64600	68000	71400
30	35550	37670	39817	37819	40075	42359	42357	44884	47442	51581	54653	57763
35	28515	30410	32350	30335	32351	34415	33975	36233	38545	41487	44238	47052
40	23033	24718	26459	24504	26295	28147	27444	29451	31525	33602	36050	38580
45	18731	20222	21777	19926	21513	23167	22318	24094	25947	27396	29567	31831
50	15330	16647	18032	16308	17710	19183	18265	19835	21485	22478	24400	26420
55	12623	13786	15017	13429	14666	15976	15040	16425	17893	18554	20253	22053
60	10455	11481	12576	11123	12214	13378	12457	13679	14984	15404	16906	18508
65	8708	9613	10586	9264	10227	11262	10376	11454	12613	12859	14187	15614
70	7292	8091	8956	7757	8608	9528	8688	9641	10671	10791	11967	13238
75	6137	6844	7614	6528	7281	8100	7312	8155	9072	9102	10143	11276
80	5190	5817	6503	5521	6188	6918	6184	6930	7748	7714	8638	9649
85	4410	4966	5578	4691	5283	5934	5254	5917	6646	6568	7389	8293
90	3764	4258	4805	4004	4530	5112	4485	5073	5725	5617	6348	7157
95	3226	3666	41560	3432	3900	4421	3844	4369	4952	4824	5476	6202
100	2777	3170	3609	2954	3372	3839	3309	3777	4300	4160	4743	5394
105	2400	2751	3145	2553	2926	3346	2860	3278	3747	3602	4124	4710
110	2082	2396	2751	2215	2549	2927	2481	2855	3278	3130	3598	4126
115	1813	2095	2414	1928	2228	2569	2160	2496	2877	2730	3151	3628
120	1584	1837	2126	1685	1955	2262	1887	2189	2533	2389	2768	3200
125	1388	1617	1878	1477	1720	1998	1654	1927	2238	2098	2440	2831

Confidential, Do Not Disseminate.

TEMP. (℃)	0805-J-154-4055			0805-J-204-3950			0805-J-224-4055			0805-J-334-4100		
	Resistance(Ω)			Resistance(Ω)			Resistance(Ω)			Resistance(Ω)		
	Min.	Center	Max.	Min.	Min.	Min.	Min.	Center	Max.	Min.	Center	Max.
-40	5638036	6649756	7823416	12920419	12920419	12920419	5638036	6649756	7823416	8269120	9752975	11474344
-35	3956412	4615532	5370998	9031151	9031151	9031151	3956412	4615532	5370998	5802737	6769447	7877464
-30	2817095	3252070	3744823	6406285	6406285	6406285	2817095	3252070	3744823	4131739	4769703	5492407
-25	2033506	2323945	2649227	4607648	4607648	4607648	2033506	2323945	2649227	2982475	3408453	3885533
-20	1486898	1682893	1899961	3357424	3357424	3357424	1486898	1682893	1899961	2180784	2468243	2786610
-15	1100484	1234005	1380267	2476615	2476615	2476615	1100484	1234005	1380267	1614044	1809874	2024391
-10	823859	915583	1014975	1848130	1848130	1848130	823859	915583	1014975	1208327	1342855	1488629
-5	623464	686930	754964	1394271	1394271	1394271	623464	686930	754964	914413	1007497	1107280
0	476651	520829	567679	1062778	1062778	1062778	476651	520829	567679	699088	763883	832595
5	367945	398841	431252	818044	818044	818044	367945	398841	431252	539652	584967	632502
10	286638	308317	330807	635514	635514	635514	286638	308317	330807	420403	452199	485183
15	225242	240478	256103	498057	498057	498057	225242	240478	256103	330356	352702	375618
20	178458	189163	200008	393590	393590	393590	178458	189163	200008	261739	277439	293345
25	142500	150000	157500	313500	313500	313500	142500	150000	157500	209000	220000	231000
30	113102	119859	126702	248188	248188	248188	113102	119859	126702	165883	175793	185829
35	90445	96474	102648	197977	197977	197977	90445	96474	102648	132652	141495	150550
40	72845	78192	83722	159069	159069	159069	72845	78192	83722	106839	114681	122792
45	59070	63794	68724	128689	128689	128689	59070	63794	68724	86635	93565	100795
50	48211	52376	56759	104797	104797	104797	48211	52376	56759	70710	76818	83246
55	39593	43261	47150	85876	85876	85876	39593	43261	47150	58070	63450	69154
60	32708	35938	39388	70793	70793	70793	32708	35938	39388	47972	52709	57768
65	27174	30019	33078	58693	58693	58693	27174	30019	33078	39855	44027	48515
70	22698	25206	27921	48928	48928	48928	22698	25206	27921	33291	36969	40951
75	19058	21272	23683	41002	41002	41002	19058	21272	23683	27952	31198	34735
80	16081	18038	20182	34532	34532	34532	16081	18038	20182	23585	26455	29601
85	13633	15366	17276	29222	29222	29222	13633	15366	17276	19996	22537	25338
90	11611	13148	14852	24843	24843	24843	11611	13148	14852	17030	19284	21782
95	9632	11298	12820	21214	21214	21214	9632	11298	12820	14567	15670	18803
100	8531	9748	11110	18191	18191	18191	8531	9748	11110	12513	14297	16295
105	7358	8443	9665	15663	15663	15663	7358	8443	9665	10791	12383	14175
110	6370	7341	8438	13539	13539	13539	6370	7341	8438	9343	10766	12376
115	5536	6405	7393	11747	11747	11747	5536	6405	7393	8119	9394	10843
120	4828	5608	6499	10229	10229	10229	4828	5608	6499	7080	8225	9532
125	4225	4927	5731	8938	8938	8938	4225	4927	5731	6196	7226	8406

Confidential, Do Not Disseminate.

TEMP. (℃)	0805-J-303-3950			-----			-----			-----		
	Resistance(Ω)			Resistance(Ω)			Resistance(Ω)			Resistance(Ω)		
	Min.	Center	Max.	Min.	Center	Max.	Min.	Center	Max.	Min.	Center	Max.
-40	839189	980776	1143385	—	—	—	—	—	—	—	—	—
-35	614129	710846	820738	—	—	—	—	—	—	—	—	—
-30	453781	520353	595200	—	—	—	—	—	—	—	—	—
-25	338472	384624	435977	—	—	—	—	—	—	—	—	—
-20	254787	286996	322469	—	—	—	—	—	—	—	—	—
-15	193505	216120	240775	—	—	—	—	—	—	—	—	—
-10	148234	164200	181430	—	—	—	—	—	—	—	—	—
-5	114503	125827	137925	—	—	—	—	—	—	—	—	—
0	89162	97224	105750	—	—	—	—	—	—	—	—	—
5	69968	75725	81751	—	—	—	—	—	—	—	—	—
10	55316	59434	63699	—	—	—	—	—	—	—	—	—
15	44046	46993	50011	—	—	—	—	—	—	—	—	—
20	35314	37420	39552	—	—	—	—	—	—	—	—	—
25	28500	30000	31500	—	—	—	—	—	—	—	—	—
30	22850	24208	25583	—	—	—	—	—	—	—	—	—
35	18438	19656	20902	—	—	—	—	—	—	—	—	—
40	14970	16056	17178	—	—	—	—	—	—	—	—	—
45	12224	13189	14194	—	—	—	—	—	—	—	—	—
50	10040	10894	11792	—	—	—	—	—	—	—	—	—
55	8288	9044	9844	—	—	—	—	—	—	—	—	—
60	6878	7546	8258	—	—	—	—	—	—	—	—	—
65	5736	6326	6960	—	—	—	—	—	—	—	—	—
70	4804	5326	5890	—	—	—	—	—	—	—	—	—
75	4042	4504	5006	—	—	—	—	—	—	—	—	—
80	3415	3824	4271	—	—	—	—	—	—	—	—	—
85	2898	3260	3659	—	—	—	—	—	—	—	—	—
90	2467	2789	3145	—	—	—	—	—	—	—	—	—
95	2108	2394	2712	—	—	—	—	—	—	—	—	—
100	1808	2062	2346	—	—	—	—	—	—	—	—	—
105	1555	1781	2035	—	—	—	—	—	—	—	—	—
110	1342	1544	1772	—	—	—	—	—	—	—	—	—
115	1161	1341	1546	—	—	—	—	—	—	—	—	—
120	1008	1169	1353	—	—	—	—	—	—	—	—	—
125	876	1021	1186	—	—	—	—	—	—	—	—	—

Confidential, Do Not Disseminate.

TEMP. (℃)	0805-F-1003-4050			0805-F-1002-3435			1206-J-103-3435			-----		
	Resistance(Ω)			Resistance(Ω)			Resistance(Ω)			Resistance(Ω)		
	Min.	Center	Max.	Min.	Center	Max.	Min.	Center	Max.	Min.	Center	Max.
-40	3088527	3230043	3377705	211000	219820	228986	214196	248277	287060	—	—	—
-35	2257461	2353434	2453242	157337	163429	169740	158674	182221	208740	—	—	—
-30	1665525	1731007	1798884	118788	123038	127427	119003	135452	153791	—	—	—
-25	1239877	1284789	1331194	90719	93709	96787	90291	101898	114710	—	—	—
-20	930995	961930	993794	70021	72140	74315	69258	77523	86557	—	—	—
-15	704871	726249	748200	54581	56092	57638	53673	59606	66029	—	—	—
-10	537932	552736	567890	42938	44019	45123	42000	46290	50891	—	—	—
-5	413686	423944	434413	34069	34846	35636	33168	36290	39606	—	—	—
0	320490	327591	334816	27250	27808	28375	26420	28704	31108	—	—	—
5	250057	254958	259929	21960	22361	22767	21218	22897	24646	—	—	—
10	196443	199806	203206	17822	18109	18399	17173	18410	19688	—	—	—
15	155347	157632	159935	14560	14765	14971	14001	14916	15850	—	—	—
20	123633	125162	126698	11971	12115	12259	11495	12171	12856	—	—	—
25	99000	100000	101000	9900	10000	10100	9500	10000	10500	—	—	—
30	79400	80377	81358	8203	8301	8400	7811	8269	8733	—	—	—
35	64054	64981	65914	6834	6928	7023	6464	6881	7306	—	—	—
40	51968	52829	53699	5723	5812	5902	5381	5759	6148	—	—	—
45	42395	43184	43984	4816	4899	4984	4506	4847	5201	—	—	—
50	34768	35485	36213	4072	4149	4228	3793	4101	4423	—	—	—
55	28661	29308	29967	3458	3529	3602	3210	3488	3780	—	—	—
60	23745	24326	24919	2949	3015	3081	2731	2981	3246	—	—	—
65	19766	20287	20819	2525	2585	2647	2334	2559	2799	—	—	—
70	16531	16997	17474	2171	2226	2282	2004	2207	2425	—	—	—
75	13889	14305	14732	1873	1923	1975	1728	1912	2109	—	—	—
80	11721	12092	12474	1622	1668	1715	1497	1662	1842	—	—	—
85	9934	10265	10606	1409	1451	1494	1301	1451	1615	—	—	—
90	8454	8750	9055	1229	1267	1306	1136	1272	1421	—	—	—
95	7223	7488	7761	1075	1109	1145	995	1118	1254	—	—	—
100	6196	6433	6678	943	975	1007	875	987	1111	—	—	—
105	5336	5548	5768	829	858	889	772	874	987	—	—	—
110	4612	4802	5000	732	758	786	683	776	880	—	—	—
115	4000	4171	4349	647	672	697	606	692	787	—	—	—
120	3482	3636	3796	574	596	620	540	618	705	—	—	—
125	3041	3180	3324	510	531	552	482	554	634	—	—	—

Confidential, Do Not Disseminate.

化學實驗室-高雄 Chemical Laboratory - Kao., SGS Taiwan Ltd.

試驗報告
Test Report

號碼(No.) : KA/2018/C1302A-01 日期(Date) : 2019/01/02 頁數(Page): 1 of 12

欣統股份有限公司/東莞市欣杭電子有限公司
SYNTON-TECH CORPORATION / SYNTRONIC CORPORATION
台灣省新北市汐止區新台五路一段79號16樓之3/廣東省東莞市大朗鎮水口村水常一路13號
16F-3, NO.79, FAR EAST WORLD CENTER SEC.1, HSIN TAI WU ROAD, HSI-CHIH DISTRICT, NEW TAIPEI CITY ,TAIWAN, R.O.C
NO.13,SHUI CHANG YI RD. ,SHUI KOU LNDUSTRIAL ZONE DA LANG ,DONG GUAN,GUANG DONG,CHINA

以下測試樣品係由客戶送樣，且由客戶聲稱並經客戶確認如下 (The following samples was/were submitted and identified by/on behalf of the client as)：

樣品名稱(Sample Description) : SMD NTC THERMISTOR
樣品型號(Style/Item No.) : CNTC TYPE
收件日期(Sample Receiving Date) : 2018/12/14
測試期間(Testing Period) : 2018/12/14 to 2018/12/20

測試需求(Test Requested) :

(1) 依據客戶指定，參考RoHS 2011/65/EU Annex II及其修訂指令(EU) 2015/863測試鎘、鉛、汞、六價鉻、多溴聯苯、多溴聯苯醚, DBP, BBP, DEHP, DIBP. (As specified by client, with reference to RoHS 2011/65/EU Annex II and amending Directive (EU) 2015/863 to determine Cadmium, Lead, Mercury, Cr(VI), PBBs, PBDEs, DBP, BBP, DEHP, DIBP contents in the submitted sample(s).)

(2) 其他測試項目請見下一頁 . (Please refer to next pages for the other item(s).)

測試結果(Test Results) : 請見下一頁 (Please refer to next pages).

結論(Conclusion) :

(1) 根據客戶所提供的樣品，其鎘、鉛、汞、六價鉻、多溴聯苯、多溴聯苯醚, DBP, BBP, DEHP, DIBP的測試結果符合RoHS 2011/65/EU Annex II暨其修訂指令(EU) 2015/863之限值要求. (Based on the performed tests on submitted sample(s), the test results of Cadmium, Lead, Mercury, Cr(VI), PBBs, PBDEs, DBP, BBP, DEHP, DIBP comply with the limits as set by RoHS Directive (EU) 2015/863 amending Annex II to Directive 2011/65/EU.)

Ray Chang

報告簽署人/Ray Chang, Ph.D./Manager -Tech
Signed for and on behalf of
SGS Taiwan Limited

SGS TAIWAN LTD

This document is issued by the Company subject to its General Conditions of Service printed overleaf, available on request or accessible at http://www.sgs.com/en/Terms-and-Conditions.aspx and, for electronic format documents, subject to Terms and Conditions for Electronic Documents at http://www.sgs.com/en/Terms-and-Conditions/Terms-e-Document.aspx. Attention is drawn to the limitation of liability, indemnification and jurisdiction issues defined therein. Any holder of this document is advised that information contained hereon reflects the Company's findings at the time of its intervention only and within the limits of Client's instructions, if any. The Company's sole responsibility is to its Client and this document does not exonerate parties to a transaction from exercising all their rights and obligations under the transaction documents. This document cannot be reproduced except in full, without prior written approval of the Company. Any unauthorized alteration, forgery or falsification of the content or appearance of this document is unlawful and offenders may be prosecuted to the fullest extent of the law. Unless otherwise stated the results shown in this test report refer only to the sample(s) tested.

TWC5163567

SGS Taiwan Ltd. 台灣檢驗科技股份有限公司 | No.61, Kai -Fa Road, Nanzih Export Processing Zone, Kaohsiung, Taiwan /高雄市楠梓加工出口區開發路61號
t (886-7) 301-2121 f (886-7) 301-0867 www.sgs.tw
Member of SGS Group

化學實驗室-高雄 Chemical Laboratory - Kao., SGS Taiwan Ltd.

試驗報告
Test Report

號碼(No.) : KA/2018/C1302A-01 日期(Date) : 2019/01/02 頁數(Page): 2 of 12

欣統股份有限公司/東莞市欣杭電子有限公司
SYNTON-TECH CORPORATION / SYNTRONIC CORPORATION
台灣省新北市沙止區新台五路一段79號16樓之3/廣東省東莞市大朗鎮水口村水雷一路13號
16F-3, NO.79, FAR EAST WORLD CENTER SEC.1, HSIN TAI WU ROAD, HSI-CHIH DISTRICT, NEW TAIPEI CITY ,TAIWAN, R.O.C
NO.13,SHUI CHANG YI RD. ,SHUI KOU LNDUSTRIAL ZONE DA LANG ,DONG GUAN,GUANG DONG,CHINA

測試結果(Test Results)

測試部位(PART NAME) NO.1 : 黑/銀色電子零件 (BLACK/SILVER PCBA)

測試項目 (Test Items)	單位 (Unit)	測試方法 (Method)	方法偵測極限值 (MDL)	結果 (Result) NO.1	法規限值 (Limit)
鎘 / Cadmium (Cd)	mg/kg	參考IEC 62321-5: 2013，以感應耦合電漿原子發射光譜儀檢測. / With reference to IEC 62321-5: 2013 and performed by ICP-AES.	2	n.d.	100
鉛 / Lead (Pb)	mg/kg	參考IEC 62321-5: 2013，以感應耦合電漿原子發射光譜儀檢測. / With reference to IEC 62321-5: 2013 and performed by ICP-AES.	2	n.d.	1000
汞 / Mercury (Hg)	mg/kg	參考IEC 62321-4: 2013，以感應耦合電漿原子發射光譜儀檢測. / With reference to IEC 62321-4: 2013 and performed by ICP-AES.	2	n.d.	1000
六價鉻 / Hexavalent Chromium Cr(VI)	mg/kg	參考IEC 62321-7-2:2017，以UV-VIS檢測. / With reference to IEC 62321-7-2:2017 and performed by UV-VIS.	8	n.d.	1000
多溴聯苯總和 / Sum of PBBs	mg/kg	參考IEC 62321-6:2015，以氣相層析/質譜儀檢測. / With reference to IEC 62321-6:2015 and performed by GC/MS.	-	n.d.	1000
一溴聯苯 / Monobromobiphenyl	mg/kg		5	n.d.	-
二溴聯苯 / Dibromobiphenyl	mg/kg		5	n.d.	-
三溴聯苯 / Tribromobiphenyl	mg/kg		5	n.d.	-
四溴聯苯 / Tetrabromobiphenyl	mg/kg		5	n.d.	-
五溴聯苯 / Pentabromobiphenyl	mg/kg		5	n.d.	-
六溴聯苯 / Hexabromobiphenyl	mg/kg		5	n.d.	-
七溴聯苯 / Heptabromobiphenyl	mg/kg		5	n.d.	-
八溴聯苯 / Octabromobiphenyl	mg/kg		5	n.d.	-
九溴聯苯 / Nonabromobiphenyl	mg/kg		5	n.d.	-
十溴聯苯 / Decabromobiphenyl	mg/kg		5	n.d.	-

This document is issued by the Company subject to its General Conditions of Service printed overleaf, available on request or accessible at http://www.sgs.com/en/Terms-and-Conditions.aspx and, for electronic format documents, subject to Terms and Conditions for Electronic Documents at http://www.sgs.com/en/Terms-and-Conditions/Terms-e-Document.aspx. Attention is drawn to the limitation of liability, indemnification and jurisdiction issues defined therein. Any holder of this document is advised that information contained hereon reflects the Company's findings at the time of its intervention only and within the limits of Client's instructions, if any. The Company's sole responsibility is to its Client and this document does not exonerate parties to a transaction from exercising all their rights and obligations under the transaction documents. This document cannot be reproduced except in full, without prior written approval of the Company. Any unauthorized alteration, forgery or falsification of the content or appearance of this document is unlawful and offenders may be prosecuted to the fullest extent of the law. Unless otherwise stated the results shown in this test report refer only to the sample(s) tested.

化學實驗室-高雄 Chemical Laboratory - Kao., SGS Taiwan Ltd.

試驗報告
Test Report

號碼(No.) : KA/2018/C1302A-01 日期(Date) : 2019/01/02 頁數(Page): 3 of 12

欣統股份有限公司/東莞市欣杭電子有限公司
SYNTON-TECH CORPORATION / SYNTRONIC CORPORATION
台灣省新北市汐止區新台五路一段79號16樓之3/廣東省東莞市大朗鎮水口村水常一路13號
16F-3, NO.79, FAR EAST WORLD CENTER SEC.1, HSIN TAI WU ROAD, HSI-CHIH DISTRICT, NEW TAIPEI CITY ,TAIWAN, R.O.C
NO.13,SHUI CHANG YI RD. ,SHUI KOU LNDUSTRIAL ZONE DA LANG ,DONG GUAN,GUANG DONG,CHINA

測試項目 (Test Items)	單位 (Unit)	測試方法 (Method)	方法偵測極限值 (MDL)	結果 (Result) NO.1	法規限值 (Limit)
多溴聯苯醚總和 / Sum of PBDEs	mg/kg	參考IEC 62321-6:2015，以氣相層析/質譜儀檢測. / With reference to IEC 62321-6:2015 and performed by GC/MS.	-	n.d.	1000
一溴聯苯醚 / Monobromodiphenyl ether	mg/kg		5	n.d.	-
二溴聯苯醚 / Dibromodiphenyl ether	mg/kg		5	n.d.	-
三溴聯苯醚 / Tribromodiphenyl ether	mg/kg		5	n.d.	-
四溴聯苯醚 / Tetrabromodiphenyl ether	mg/kg		5	n.d.	-
五溴聯苯醚 / Pentabromodiphenyl ether	mg/kg		5	n.d.	-
六溴聯苯醚 / Hexabromodiphenyl ether	mg/kg		5	n.d.	-
七溴聯苯醚 / Heptabromodiphenyl ether	mg/kg		5	n.d.	-
八溴聯苯醚 / Octabromodiphenyl ether	mg/kg		5	n.d.	-
九溴聯苯醚 / Nonabromodiphenyl ether	mg/kg		5	n.d.	-
十溴聯苯醚 / Decabromodiphenyl ether	mg/kg		5	n.d.	-
鄰苯二甲酸二異丁酯 / DIBP (Di-isobutyl phthalate) (CAS No.: 84-69-5)	mg/kg	參考IEC 62321-8:2017，以氣相層析儀/質譜儀檢測. / With reference to IEC 62321-8:2017. Analysis was performed by GC/MS.	50	n.d.	1000
鄰苯二甲酸二丁酯 / DBP (Dibutyl phthalate) (CAS No.: 84-74-2)	mg/kg	參考IEC 62321-8:2017，以氣相層析儀/質譜儀檢測. / With reference to IEC 62321-8:2017. Analysis was performed by GC/MS.	50	n.d.	1000
鄰苯二甲酸丁苯甲酯 / BBP (Butyl Benzyl phthalate) (CAS No.: 85-68-7)	mg/kg	參考IEC 62321-8:2017，以氣相層析儀/質譜儀檢測. / With reference to IEC 62321-8:2017. Analysis was performed by GC/MS.	50	n.d.	1000
鄰苯二甲酸二 (2-乙基己基)酯 / DEHP (Di- (2-ethylhexyl) phthalate) (CAS No.: 117-81-7)	mg/kg	參考IEC 62321-8:2017，以氣相層析儀/質譜儀檢測. / With reference to IEC 62321-8:2017. Analysis was performed by GC/MS.	50	n.d.	1000
鄰苯二甲酸二正辛酯 / DNOP (Di-n-octyl phthalate) (CAS No.: 117-84-0)	mg/kg	參考IEC 62321-8:2017，以氣相層析儀/質譜儀檢測. / With reference to IEC 62321-8:2017. Analysis was performed by GC/MS.	50	n.d.	-
鄰苯二甲酸二異壬酯 / DINP (Di-isononyl phthalate) (CAS No.: 28553-12-0, 68515-48-0)	mg/kg	參考IEC 62321-8:2017，以氣相層析儀/質譜儀檢測. / With reference to IEC 62321-8:2017. Analysis was performed by GC/MS.	50	n.d.	-

This document is issued by the Company subject to its General Conditions of Service printed overleaf, available on request or accessible at http://www.sgs.com/en/Terms-and-Conditions.aspx and, for electronic format documents, subject to Terms and Conditions for Electronic Documents at http://www.sgs.com/en/Terms-and-Conditions/Terms-e-Document.aspx. Attention is drawn to the limitation of liability, indemnification and jurisdiction issues defined therein. Any holder of this document is advised that information contained hereon reflects the Company's findings at the time of its intervention only and within the limits of Client's instructions, if any. The Company's sole responsibility is to its Client and this document does not exonerate parties to a transaction from exercising all their rights and obligations under the transaction documents. This document cannot be reproduced except in full, without prior written approval of the Company. Any unauthorized alteration, forgery or falsification of the content or appearance of this document is unlawful and offenders may be prosecuted to the fullest extent of the law. Unless otherwise stated the results shown in this test report refer only to the sample(s) tested.

TWC5163565

SGS Taiwan Ltd. 台灣檢驗科技股份有限公司 | No.61, Kai -Fa Road, Nanzih Export Processing Zone, Kaohsiung, Taiwan /高雄市楠梓加工出口區開發路61號
t (886-7) 301-2121 f (886-7) 301-0867 www.sgs.tw
Member of SGS Group

化學實驗室-高雄 Chemical Laboratory - Kao., SGS Taiwan Ltd.

試驗報告
Test Report

號碼(No.) : KA/2018/C1302A-01 日期(Date) : 2019/01/02 頁數(Page): 4 of 12

欣統股份有限公司/東莞市欣杭電子有限公司
SYNTON-TECH CORPORATION / SYNTRONIC CORPORATION
台灣省新北市沙止區新台五路一段79號16樓之3/廣東省東莞市大朗鎮水口村水常一路13號
16F-3, NO.79, FAR EAST WORLD CENTER SEC.1, HSIN TAI WU ROAD, HSI-CHIH DISTRICT, NEW TAIPEI CITY ,TAIWAN, R.O.C
NO.13,SHUI CHANG YI RD. ,SHUI KOU LNDUSTRIAL ZONE DA LANG ,DONG GUAN,GUANG DONG,CHINA

測試項目 (Test Items)	單位 (Unit)	測試方法 (Method)	方法偵測極限值 (MDL)	結果 (Result) NO.1	法規限值 (Limit)
鄰苯二甲酸二異癸酯 / DIDP (Di-isodecyl phthalate) (CAS No.: 26761-40-0, 68515-49-1)	mg/kg	參考IEC 62321-8:2017，以氣相層析儀/質譜儀檢測. / With reference to IEC 62321-8:2017. Analysis was performed by GC/MS.	50	n.d.	-
全氟辛烷磺酸 / Perfluorooctane sulfonates (PFOS)	mg/kg	參考US EPA 3550C: 2007，以液相層析/質譜儀檢測. / With reference to US EPA 3550C: 2007. Analysis was performed by LC/MS.	10	n.d.	-
全氟辛酸(銨) / PFOA (CAS No.: 335-67-1)	mg/kg	參考US EPA 3550C: 2007，以液相層析/質譜儀檢測. / With reference to US EPA 3550C: 2007. Analysis was performed by LC/MS.	10	n.d.	-
鹵素 / Halogen					
鹵素 (氟) / Halogen-Fluorine (F) (CAS No.: 14762-94-8)	mg/kg	參考BS EN 14582:2016，以離子層析儀檢測. / With reference to BS EN 14582:2016. Analysis was performed by IC.	50	n.d.	-
鹵素 (氯) / Halogen-Chlorine (Cl) (CAS No.: 22537-15-1)	mg/kg	參考BS EN 14582:2016，以離子層析儀檢測. / With reference to BS EN 14582:2016. Analysis was performed by IC.	50	n.d.	-
鹵素 (溴) / Halogen-Bromine (Br) (CAS No.: 10097-32-2)	mg/kg	參考BS EN 14582:2016，以離子層析儀檢測. / With reference to BS EN 14582:2016. Analysis was performed by IC.	50	n.d.	-
鹵素 (碘) / Halogen-Iodine (I) (CAS No.: 14362-44-8)	mg/kg	參考BS EN 14582:2016，以離子層析儀檢測. / With reference to BS EN 14582:2016. Analysis was performed by IC.	50	n.d.	-

This document is issued by the Company subject to its General Conditions of Service printed overleaf, available on request or accessible at http://www.sgs.com/en/Terms-and-Conditions.aspx and, for electronic format documents, subject to Terms and Conditions for Electronic Documents at http://www.sgs.com/en/Terms-and-Conditions/Terms-e-Document.aspx. Attention is drawn to the limitation of liability, indemnification and jurisdiction issues defined therein. Any holder of this document is advised that information contained hereon reflects the Company's findings at the time of its intervention only and within the limits of Client's instructions, if any. The Company's sole responsibility is to its Client and this document does not exonerate parties to a transaction from exercising all their rights and obligations under the transaction documents. This document cannot be reproduced except in full, without prior written approval of the Company. Any unauthorized alteration, forgery or falsification of the content or appearance of this document is unlawful and offenders may be prosecuted to the fullest extent of the law. Unless otherwise stated the results shown in this test report refer only to the sample(s) tested.

TWC5163564

SGS Taiwan Ltd. 台灣檢驗科技股份有限公司 | No.61, Kai -Fa Road, Nanzih Export Processing Zone, Kaohsiung, Taiwan /高雄市楠梓加工出口區開發路61號
t (886-7) 301-2121 f (886-7) 301-0867 www.sgs.tw
Member of SGS Group

化學實驗室-高雄 Chemical Laboratory - Kao., SGS Taiwan Ltd.

試驗報告
Test Report

號碼(No.) : KA/2018/C1302A-01 日期(Date) : 2019/01/02 頁數(Page): 5 of 12

欣統股份有限公司/東莞市欣杭電子有限公司
SYNTON-TECH CORPORATION / SYNTRONIC CORPORATION
台灣省新北市汐止區新台五路一段79號16樓之3/廣東省東莞市大朗鎮水口村水常一路13號
16F-3, NO.79, FAR EAST WORLD CENTER SEC.1, HSIN TAI WU ROAD, HSI-CHIH DISTRICT, NEW TAIPEI CITY ,TAIWAN, R.O.C
NO.13,SHUI CHANG YI RD. ,SHUI KOU LNDUSTRIAL ZONE DA LANG ,DONG GUAN,GUANG DONG,CHINA

測試項目 (Test Items)	單位 (Unit)	測試方法 (Method)	方法偵測極限值 (MDL)	結果 (Result) NO.1	法規限值 (Limit)
銻 / Antimony (Sb)	mg/kg	參考US EPA 3052: 1996，以感應耦合電漿原子發射光譜儀檢測. / With reference to US EPA 3052: 1996. Analysis was performed by ICP-AES.	2	n.d.	-
鈹 / Beryllium (Be)	mg/kg	參考US EPA 3052: 1996，以感應耦合電漿原子發射光譜儀檢測. / With reference to US EPA 3052: 1996. Analysis was performed by ICP-AES.	2	n.d.	-

備註(Note)：
1. mg/kg = ppm；0.1wt% = 1000ppm
2. MDL = Method Detection Limit（方法偵測極限值）
3. n.d. = Not Detected（未檢出）
4. "-" = Not Regulated（無規格值）
5. 此為2018/12/20所發行KA/2018/C1302之加發報告，原始資料請參考KA/2018/C1302. (This is the additional test report of KA/2018/C1302 which was issued on 2018/12/20. Please refer to KA/2018/C1302 for original information.)

PFOS參考資訊(Reference Information) : 持久性有機污染物 POPs - (EU) 757/2010

PFOS濃度在物質或製備中不得超過0.001%(10ppm)，在半成品、成品或零部件中不得超過0.1%(1000ppm)，在紡織品或塗層材料中不得超過1μg/m²。
(Outlawing PFOS as substances or preparations in concentrations above 0.001% (10ppm), in semi-finished products or articles or parts at a level above 0.1%(1000ppm), in textiles or other coated materials above 1μg/m².)
全氟辛烷磺酸指全氟辛烷磺酸和它的衍生物包括全氟辛烷磺酸, 全氟辛基磺醯胺, N-甲基全氟辛烷磺醯胺, N-乙基全氟辛烷磺醯胺, N-甲基全氟辛基磺醯基氨基乙醇, N-乙基全氟辛基磺醯基氨基乙醇。(PFOS refer to Perfluorooctanesulfonic acid and its derivatives including Perfluorooctanesulfonic acid, Perfluoroctane sulfonamide, N-Methylperfluoroctane sulfonamide, N-Ethylperfluoroctane sulfonamide, N-Methylperfluoroctane sulfonamidoethanol and N-Ethylperfluoroctane sulfonamidoethanol.)

This document is issued by the Company subject to its General Conditions of Service printed overleaf, available on request or accessible at http://www.sgs.com/en/Terms-and-Conditions.aspx and, for electronic format documents, subject to Terms and Conditions for Electronic Documents at http://www.sgs.com/en/Terms-and-Conditions/Terms-e-Document.aspx. Attention is drawn to the limitation of liability, indemnification and jurisdiction issues defined therein. Any holder of this document is advised that information contained hereon reflects the Company's findings at the time of its intervention only and within the limits of Client's instructions, if any. The Company's sole responsibility is to its Client and this document does not exonerate parties to a transaction from exercising all their rights and obligations under the transaction documents. This document cannot be reproduced except in full, without prior written approval of the Company. Any unauthorized alteration, forgery or falsification of the content or appearance of this document is unlawful and offenders may be prosecuted to the fullest extent of the law. Unless otherwise stated the results shown in this test report refer only to the sample(s) tested.
TWC5163563
SGS Taiwan Ltd. 台灣檢驗科技股份有限公司 | No.61, Kai-Fa Road, Nanzih Export Processing Zone, Kaohsiung, Taiwan /高雄市楠梓加工出口區開發路61號
t (886-7) 301-2121 f (886-7) 301-0867 www.sgs.tw
Member of SGS Group

化學實驗室-高雄 Chemical Laboratory - Kao., SGS Taiwan Ltd.

試驗報告

Test Report

號碼(No.) : KA/2018/CI302A-01 日期(Date) : 2019/01/02 頁數(Page): 6 of 12

欣統股份有限公司/東莞市欣杭電子有限公司
SYNTON-TECH CORPORATION / SYNTRONIC CORPORATION
台灣省新北市汐止區新台五路一段79號16樓之3/廣東省東莞市大朗鎮水口村水常一路13號
16F-3, NO.79, FAR EAST WORLD CENTER SEC.1, HSIN TAI WU ROAD, HSI-CHIH DISTRICT, NEW TAIPEI CITY ,TAIWAN, R.O.C
NO.13,SHUI CHANG YI RD. ,SHUI KOU LNDUSTRIAL ZONE DA LANG ,DONG GUAN,GUANG DONG,CHINA

重金屬流程圖 / Analytical flow chart of Heavy Metal

根據以下的流程圖之條件，樣品已完全溶解。（六價鉻測試方法除外）
These samples were dissolved totally by pre-conditioning method according to below flow chart. (Cr^{6+} test method excluded)

- 測試人員：劉俊宏/ Technician : Jony Liu
- 測試負責人：張伯章/ Supervisor: Ray Chang

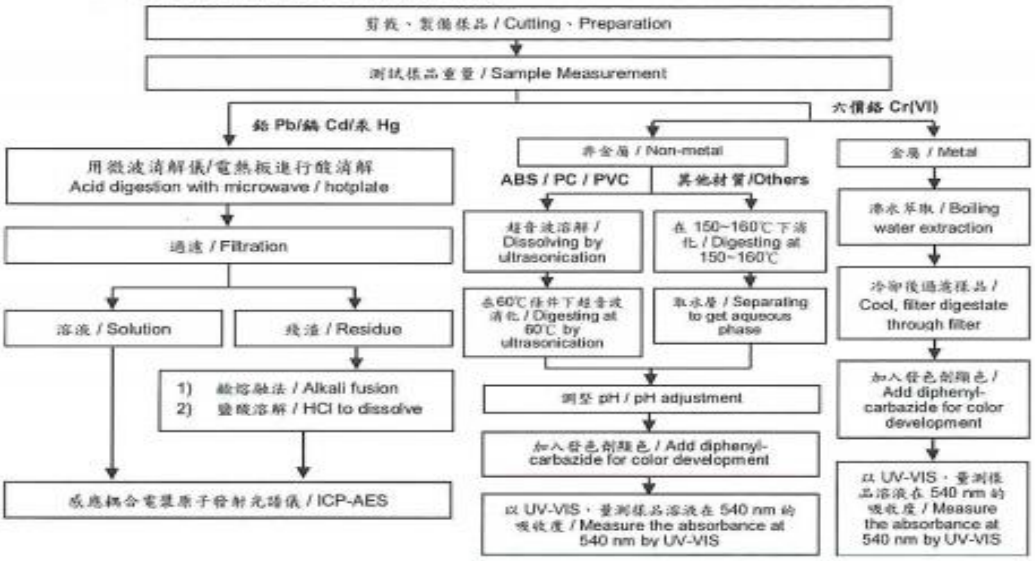

This document is issued by the Company subject to its General Conditions of Service printed overleaf, available on request or accessible at http://www.sgs.com/en/Terms-and-Conditions.aspx and, for electronic format documents, subject to Terms and Conditions for Electronic Documents at http://www.sgs.com/en/Terms-and-Conditions/Terms-e-Document.aspx. Attention is drawn to the limitation of liability, indemnification and jurisdiction issues defined therein. Any holder of this document is advised that information contained hereon reflects the Company's findings at the time of its intervention only and within the limits of Client's instructions, if any. The Company's sole responsibility is to its Client and this document does not exonerate parties to a transaction from exercising all their rights and obligations under the transaction documents. This document cannot be reproduced except in full, without prior written approval of the Company. Any unauthorized alteration, forgery or falsification of the content or appearance of this document is unlawful and offenders may be prosecuted to the fullest extent of the law. Unless otherwise stated the results shown in this test report refer only to the sample(s) tested.
TWC5163562

SGS Taiwan Ltd. 台灣檢驗科技股份有限公司 | No.61, Kai -Fa Road, Nanzih Export Processing Zone, Kaohsiung, Taiwan /高雄市楠梓加工出口區開發路61號
t (886-7) 301-2121 f (886-7) 301-0867 www.sgs.tw
Member of SGS Group

化學實驗室-高雄 Chemical Laboratory - Kao., SGS Taiwan Ltd.

試驗報告

Test Report

號碼(No.) : KA/2018/C1302A-01 日期(Date) : 2019/01/02 頁數(Page): 7 of 12

欣統股份有限公司/東莞市欣杭電子有限公司
SYNTON-TECH CORPORATION / SYNTRONIC CORPORATION
台灣省新北市汐止區新台五路一段79號16樓之3/廣東省東莞市大朗鎮水口村水常一路13號
16F-3, NO.79, FAR EAST WORLD CENTER SEC.1, HSIN TAI WU ROAD, HSI-CHIH DISTRICT, NEW TAIPEI CITY ,TAIWAN, R.O.C
NO.13,SHUI CHANG YI RD. ,SHUI KOU LNDUSTRIAL ZONE DA LANG ,DONG GUAN,GUANG DONG,CHINA

多溴聯苯/多溴聯苯醚 分析流程圖 / PBB/PBDE analytical FLOW CHART

- 測試人員：陳成錚 / Technician : Dorothy Chen
- 測試負責人：張伯睿 / Supervisor: Ray Chang

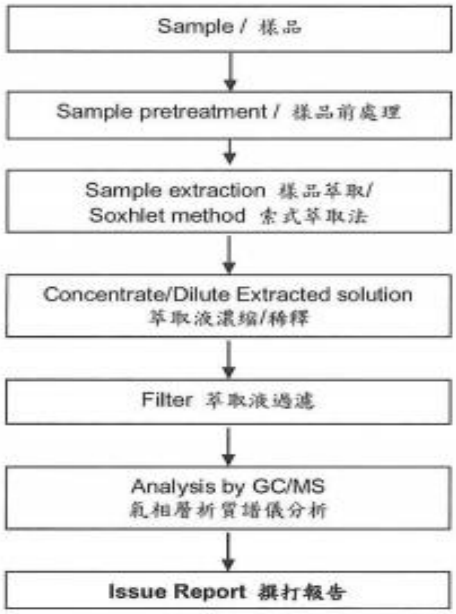

This document is issued by the Company subject to its General Conditions of Service printed overleaf, available on request or accessible at http://www.sgs.com/en/Terms-and-Conditions.aspx and, for electronic format documents, subject to Terms and Conditions for Electronic Documents at http://www.sgs.com/en/Terms-and-Conditions/Terms-e-Document.aspx. Attention is drawn to the limitation of liability, indemnification and jurisdiction issues defined therein. Any holder of this document is advised that information contained hereon reflects the Company's findings at the time of its intervention only and within the limits of Client's instructions, if any. The Company's sole responsibility is to its Client and this document does not exonerate parties to a transaction from exercising all their rights and obligations under the transaction documents. This document cannot be reproduced except in full, without prior written approval of the Company. Any unauthorized alteration, forgery or falsification of the content or appearance of this document is unlawful and offenders may be prosecuted to the fullest extent of the law. Unless otherwise stated the results shown in this test report refer only to the sample(s) tested.

TWC5163561

SGS Taiwan Ltd. 台灣檢驗科技股份有限公司 | No.61, Kai-Fa Road, Nanzih Export Processing Zone, Kaohsiung, Taiwan / 高雄市楠梓加工出口區開發路61號
t (886-7) 301-2121 f (886-7) 301-0867 www.sgs.tw
Member of SGS Group

化學實驗室-高雄 Chemical Laboratory - Kao., SGS Taiwan Ltd.

試驗報告
Test Report

號碼(No.) : KA/2018/C1302A-01 日期(Date) : 2019/01/02 頁數(Page): 8 of 12

欣統股份有限公司/東莞市欣杭電子有限公司
SYNTON-TECH CORPORATION / SYNTRONIC CORPORATION
台灣省新北市汐止區新台五路一段79號16樓之3/廣東省東莞市大朗鎮水口村水常一路13號
16F-3, NO.79, FAR EAST WORLD CENTER SEC.1, HSIN TAI WU ROAD, HSI-CHIH DISTRICT, NEW TAIPEI CITY ,TAIWAN, R.O.C
NO.13,SHUI CHANG YI RD. ,SHUI KOU LNDUSTRIAL ZONE DA LANG ,DONG GUAN,GUANG DONG,CHINA

可塑劑分析流程圖 / Analytical flow chart of phthalate content

- 測試人員：陳威錚 / Technician : Dorothy Chen
- 測試負責人：張伯睿 / Supervisor: Ray Chang

【測試方法/Test method: IEC 62321-8】

樣品前處理/分樣 /
Sample pretreatment/separation

↓

樣品以 THF 四氫呋喃溶解萃取 /
Sample dissolved/extracted by THF

↓

萃取液稀釋 /
Dilute Extracted solution

↓

氣相層析質譜儀分析 /
Analysis was performed by GC/MS

↓

數據 / Data

This document is issued by the Company subject to its General Conditions of Service printed overleaf, available on request or accessible at http://www.sgs.com/en/Terms-and-Conditions.aspx and, for electronic format documents, subject to Terms and Conditions for Electronic Documents at http://www.sgs.com/en/Terms-and-Conditions/Terms-e-Document.aspx. Attention is drawn to the limitation of liability, indemnification and jurisdiction issues defined therein. Any holder of this document is advised that information contained hereon reflects the Company's findings at the time of its intervention only and within the limits of Client's instructions, if any. The Company's sole responsibility is to its Client and this document does not exonerate parties to a transaction from exercising all their rights and obligations under the transaction documents. This document cannot be reproduced except in full, without prior written approval of the Company. Any unauthorized alteration, forgery or falsification of the content or appearance of this document is unlawful and offenders may be prosecuted to the fullest extent of the law. Unless otherwise stated the results shown in this test report refer only to the sample(s) tested.

TWC5163560

SGS Taiwan Ltd. 台灣檢驗科技股份有限公司 | No.61, Kai-Fa Road, Nanzih Export Processing Zone, Kaohsiung, Taiwan /高雄市楠梓加工出口區開發路61號
t (886-7) 301-2121 f (886-7) 301-0867 www.sgs.tw
Member of SGS Group

化學實驗室-高雄 Chemical Laboratory - Kao., SGS Taiwan Ltd.

試驗報告
Test Report

號碼(No.) : KA/2018/C1302A-01 日期(Date) : 2019/01/02 頁數(Page): 9 of 12

欣統股份有限公司/東莞市欣杭電子有限公司
SYNTON-TECH CORPORATION / SYNTRONIC CORPORATION
台灣省新北市汐止區新台五路一段79號16樓之3/廣東省東莞市大朗鎮水口村水常一路13號
16F-3, NO.79, FAR EAST WORLD CENTER SEC.1, HSIN TAI WU ROAD, HSI-CHIH DISTRICT, NEW TAIPEI CITY ,TAIWAN, R.O.C
NO.13,SHUI CHANG YI RD. ,SHUI KOU LNDUSTRIAL ZONE DA LANG ,DONG GUAN,GUANG DONG,CHINA

根據以下的流程圖之條件，樣品已完全溶解。 / These samples were dissolved totally by pre-conditioning method according to below flow chart.

- 測試人員：劉俊宏/ Technician : Jony Liu
- 測試負責人：張伯春/ Supervisor: Ray Chang

元素以 ICP-AES 分析的消化流程圖
(Flow Chart of digestion for the elements analysis performed by ICP-AES)

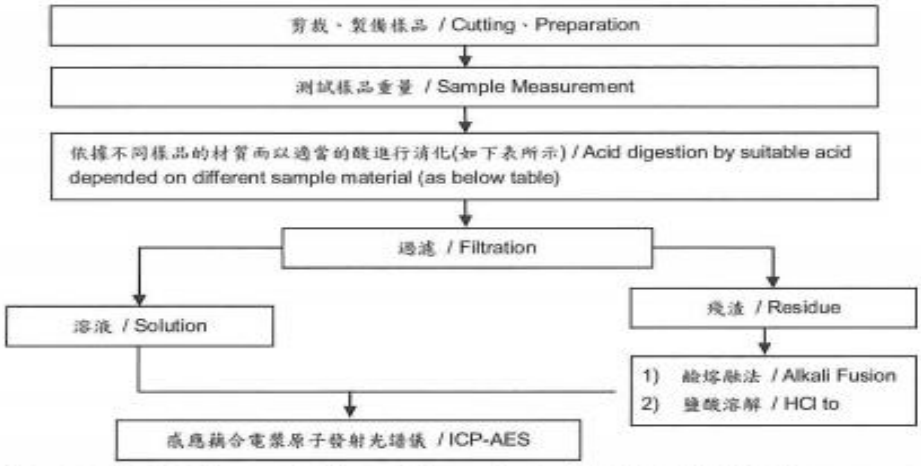

鋼,銅,鋁,焊錫 / Steel, copper, aluminum, solder	王水,硝酸,鹽酸,氫氟酸,雙氧水 / Aqua regia, HNO_3, HCl, HF, H_2O_2
玻璃 / Glass	硝酸,氫氟酸 / HNO_3/HF
金,鉑,鈀,陶瓷 / Gold, platinum, palladium, ceramic	王水 / Aqua regia
銀 / Silver	硝酸 / HNO_3
塑膠 / Plastic	硫酸,雙氧水,硝酸,鹽酸 / H_2SO_4, H_2O_2, HNO_3, HCl
其他 / Others	加入任何酸至完全溶解 / Any acid to total digestion

This document is issued by the Company subject to its General Conditions of Service printed overleaf, available on request or accessible at http://www.sgs.com/en/Terms-and-Conditions.aspx and, for electronic format documents, subject to Terms and Conditions for Electronic Documents at http://www.sgs.com/en/Terms-and-Conditions/Terms-e-Document.aspx. Attention is drawn to the limitation of liability, indemnification and jurisdiction issues defined therein. Any holder of this document is advised that information contained hereon reflects the Company's findings at the time of its intervention only and within the limits of Client's instructions, if any. The Company's sole responsibility is to its Client and this document does not exceneate parties to a transaction from exercising all their rights and obligations under the transaction documents. This document cannot be reproduced except in full, without prior written approval of the Company. Any unauthorized alteration, forgery or falsification of the content or appearance of this document is unlawful and offenders may be prosecuted to the fullest extent of the law. Unless otherwise stated the results shown in this test report refer only to the sample(s) tested.

TWC5163559

SGS Taiwan Ltd. 台灣檢驗科技股份有限公司 | No.61, Kai -Fa Road, Nanzih Export Processing Zone, Kaohsiung, Taiwan /高雄市楠梓加工出口區開發路61號
t (886-7) 301-2121 f (886-7) 301-0867 www.sgs.tw
Member of SGS Group

化學實驗室-高雄 Chemical Laboratory - Kao., SGS Taiwan Ltd.

試驗報告
Test Report

號碼(No.) : KA/2018/C1302A-01 日期(Date) : 2019/01/02 頁數(Page): 10 of 12

欣統股份有限公司/東莞市欣杭電子有限公司
SYNTON-TECH CORPORATION / SYNTRONIC CORPORATION
台灣省新北市汐止區新台五路一段79號16樓之3/廣東省東莞市大朗鎮水口村水常一路13號
16F-3, NO.79, FAR EAST WORLD CENTER SEC.1, HSIN TAI WU ROAD, HSI-CHIH DISTRICT, NEW TAIPEI CITY ,TAIWAN, R.O.C
NO.13,SHUI CHANG YI RD. ,SHUI KOU LNDUSTRIAL ZONE DA LANG ,DONG GUAN,GUANG DONG,CHINA

全氟辛酸(鹽)/ 全氟辛烷磺酸分析流程圖 /
Analytical flow chart of PFOA/PFOS content

- 測試人員：黃琛瑮 / Technician : Ginny Huang
- 測試負責人：張伯睿 / Supervisor: Ray Chang

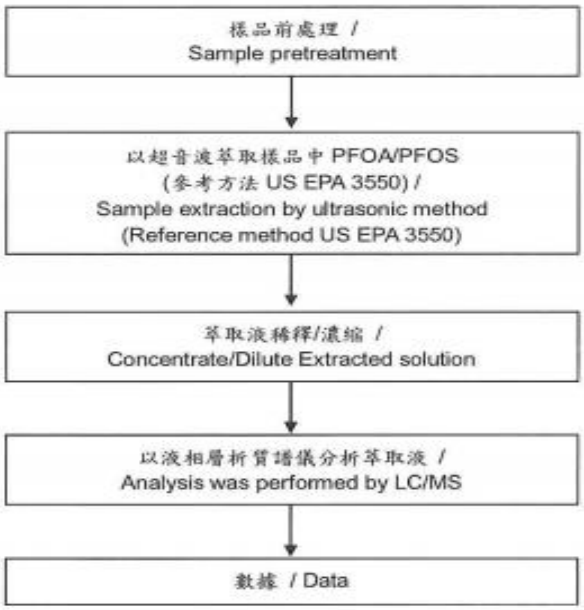

This document is issued by the Company subject to its General Conditions of Service printed overleaf, available on request or accessible at http://www.sgs.com/en/Terms-and-Conditions.aspx and, for electronic format documents, subject to Terms and Conditions for Electronic Documents at http://www.sgs.com/en/Terms-and-Conditions/Terms-e-Document.aspx. Attention is drawn to the limitation of liability, indemnification and jurisdiction issues defined therein. Any holder of this document is advised that information contained hereon reflects the Company's findings at the time of its intervention only and within the limits of Client's instructions, if any. The Company's sole responsibility is to its Client and this document does not exonerate parties to a transaction from exercising all their rights and obligations under the transaction documents. This document cannot be reproduced except in full, without prior written approval of the Company. Any unauthorized alteration, forgery or falsification of the content or appearance of this document is unlawful and offenders may be prosecuted to the fullest extent of the law. Unless otherwise stated the results shown in this test report refer only to the sample(s) tested.
TWC5163558
SGS Taiwan Ltd. 台灣檢驗科技股份有限公司 | No.61, Kai -Fa Road, Nanzih Export Processing Zone, Kaohsiung, Taiwan /高雄市楠梓加工出口區開發路61號
t (886-7) 301-2121 f (886-7) 301-0867 www.sgs.tw
Member of SGS Group

化學實驗室-高雄 Chemical Laboratory - Kao., SGS Taiwan Ltd.

試驗報告
Test Report

號碼(No.) : KA/2018/C1302A-01 日期(Date) : 2019/01/02 頁數(Page): 11 of 12

欣統股份有限公司/東莞市欣杭電子有限公司
SYNTON-TECH CORPORATION / SYNTRONIC CORPORATION
台灣省新北市汐止區新台五路一段79號16樓之3/廣東省東莞市大朗鎮水口村水常一路13號
16F-3, NO.79, FAR EAST WORLD CENTER SEC.1, HSIN TAI WU ROAD, HSI-CHIH DISTRICT, NEW TAIPEI CITY ,TAIWAN, R.O.C
NO.13,SHUI CHANG YI RD. ,SHUI KOU LNDUSTRIAL ZONE DA LANG ,DONG GUAN,GUANG DONG,CHINA

鹵素分析流程圖 / Analytical flow chart of halogen content

- 測試人員：洪秀真/ Technician : Jean Hung
- 測試負責人：張伯睿 / Supervisor: Ray Chang

樣品拍照及報告編號 /
Sample picture and report number

↓

樣品前處理/分樣 /
Sample pretreatment/separation

↓

秤重及將樣品放入樣品槽中 /
Weighting and putting sample in cell

↓

氧氣燃燒彈/吸收
Oxygen Bomb Combustion / Absorption

↓

稀釋至固定體積 /
Dilution to fixed volume

↓

離子層析儀分析 /
Analysis was performed by IC

This document is issued by the Company subject to its General Conditions of Service printed overleaf, available on request or accessible at http://www.sgs.com/en/Terms-and-Conditions.aspx and, for electronic format documents, subject to Terms and Conditions for Electronic Documents at http://www.sgs.com/en/Terms-and-Conditions/Terms-e-Document.aspx. Attention is drawn to the limitation of liability, indemnification and jurisdiction issues defined therein. Any holder of this document is advised that information contained hereon reflects the Company's findings at the time of its intervention only and within the limits of Client's instructions, if any. The Company's sole responsibility is to its Client and this document does not exonerate parties to a transaction from exercising all their rights and obligations under the transaction documents. This document cannot be reproduced except in full, without prior written approval of the Company. Any unauthorized alteration, forgery or falsification of the content or appearance of this document is unlawful and offenders may be prosecuted to the fullest extent of the law. Unless otherwise stated the results shown in this test report refer only to the sample(s) tested.

TWC5163557

SGS Taiwan Ltd. 台灣檢驗科技股份有限公司 | No.61, Kai –Fa Road, Nanzih Export Processing Zone, Kaohsiung, Taiwan /高雄市楠梓加工出口區開發路61號
t (886-7) 301-2121 f (886-7) 301-0867 www.sgs.tw
Member of SGS Group

化學實驗室-高雄 Chemical Laboratory - Kao., SGS Taiwan Ltd.

試驗報告

Test Report

號碼(No.) : KA/2018/C1302A-01 日期(Date) : 2019/01/02 頁數(Page): 12 of 12

欣統股份有限公司/東莞市欣杭電子有限公司
SYNTON-TECH CORPORATION / SYNTRONIC CORPORATION
台灣省新北市汐止區新台五路一段79號16樓之3/廣東省東莞市大朗鎮水口村水常一路13號
16F-3, NO.79, FAR EAST WORLD CENTER SEC.1, HSIN TAI WU ROAD, HSI-CHIH DISTRICT, NEW TAIPEI CITY ,TAIWAN, R.O.C
NO.13,SHUI CHANG YI RD. ,SHUI KOU LNDUSTRIAL ZONE DA LANG ,DONG GUAN,GUANG DONG,CHINA

* 照片中如有箭頭標示，則表示為實際檢測之樣品/部位. *
(The tested sample / part is marked by an arrow if it's shown on the photo.)

KA/2018/C1302

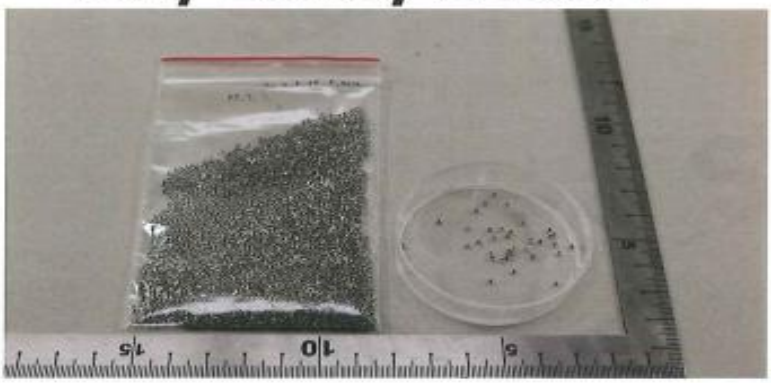

** 報告結尾(End of Report) **

This document is issued by the Company subject to its General Conditions of Service printed overleaf, available on request or accessible at http://www.sgs.com/en/Terms-and-Conditions.aspx and, for electronic format documents, subject to Terms and Conditions for Electronic Documents at http://www.sgs.com/en/Terms-e-Document.aspx. Attention is drawn to the limitation of liability, indemnification and jurisdiction issues defined therein. Any holder of this document is advised that information contained hereon reflects the Company's findings at the time of its intervention only and within the limits of Client's instructions, if any. The Company's sole responsibility is to its Client and this document does not exonerate parties to a transaction from exercising all their rights and obligations under the transaction documents. This document cannot be reproduced except in full, without prior written approval of the Company. Any unauthorized alteration, forgery or falsification of the content or appearance of this document is unlawful and offenders may be prosecuted to the fullest extent of the law. Unless otherwise stated the results shown in this test report refer only to the sample(s) tested.

TWC5163556

SGS Taiwan Ltd. 台灣檢驗科技股份有限公司 | No.61, Kai -Fa Road, Nanzih Export Processing Zone, Kaohsiung, Taiwan /高雄市楠梓加工出口區開發路61號
t (886-7) 301-2121 f (886-7) 301-0867 www.sgs.tw
Member of SGS Group